Birla Central Library
PILANI (Jaipur State)
( Engg College Branch )
Class No :- 620.136
Book No :- T89c
Accession No :- 31550

# CONCRETE CONSTRUCTION MADE EASY

BOOK
PRODUCTION
WAR ECONOMY
STANDARD

THIS BOOK IS PRODUCED IN COMPLETE CONFORMITY WITH THE AUTHORISED ECONOMY STANDARD

A LIST OF OTHER "CONCRETE SERIES" BOOKS IS GIVEN ON PAGE 114

# CONCRETE CONSTRUCTION MADE EASY

BY

LESLIE TURNER
B.Sc., M.Inst.C.E., M.I.Struct.E.

AND

ALBERT LAKEMAN
L.R.I.B.A., M.I.Struct.E.

PUBLISHED BY
CONCRETE PUBLICATIONS LIMITED
14 DARTMOUTH STREET, LONDON, S.W.1

*First Edition* (3000 *copies*) . . . . . 1929
*Second* (*Revised*) *Edition* (3000 *copies*) . . . . 1936
*Third* (*Revised*) *Edition* . . . . . 1942

**Made and Printed in Great Britain by Butler & Tanner Ltd., Frome and London**

# PREFACE TO THIRD EDITION

THIS book is primarily intended for the use of architects, builders, and foremen who have concrete building work on hand for which the reinforced concrete details have not been prepared or cannot be quickly obtained. It is also hoped that it will be of assistance to engineers who find themselves responsible for occasional structural work but whose knowledge of concrete construction is limited.

With the aid of the designs given it is possible to erect a small building, tank, retaining wall, etc., and the details and operations are described in as simple a manner as is possible with a somewhat complicated subject.

The designs are based on the use of a good-class cement and aggregates and they comply with the requirements of the London County Council and the Code of Practice for Reinforced Concrete in Buildings. Since this book was first published British regulations have permitted the use of higher stresses both in the steel and in the concrete when applied to buildings. The original stresses of 600 lb. per square inch and 16,000 lb. per square inch in the concrete and steel respectively have, however, been retained so that the designs given herein may be adopted with confidence.

Owing to the diversity of planning it is obviously impossible to cover every circumstance in a limited space so that the designs have been standardised. This process makes for simplicity rather than economy in material, although it may result in ultimate economy in the cost of works.

Before these details are studied it is recommended that Chapter I (General Specification and Notes) be read; and before any work is undertaken this chapter must be carefully studied and followed. In this Third Edition this chapter has been revised to accord with current revised British Standard Specifications and enlarged to cover new methods of construction.

It should be understood that specialist advice must be obtained for works of any magnitude or exceptional difficulty; the present volume has been written to assist those who might otherwise carry out reinforced concrete work of the smaller kind without sufficient knowledge of the subject to ensure a sound structure. In such cases, if the designs given are carefully followed, coupled with good materials and workmanship, there should be no possibility of failure; thus economies are made available to those who might otherwise use different materials because of their unfamiliarity with reinforced concrete.

LESLIE TURNER.
ALBERT LAKEMAN.

*March*, 1942.

# CONTENTS

PAGE

CHAPTER I.—General Specification and Notes . . . . . 1

CHAPTER II.—Foundations . . . . . 11
Safe Loads on Ground—Foundations for Reinforced Concrete Columns and Steel Stanchions—Excavation—Reinforcement—Shuttering—Quantities—Wall Footings—Footings to Bearing Walls—Raft Foundations for Small Buildings.

CHAPTER III.—Columns . . . . . 22
Quantities—Shuttering—Erection of Shuttering—Reinforcement—Concreting.

CHAPTER IV.—Beams . . . . . 29
Single or One-Span Beams—Determination of Dimensions, etc.—Wall Bearings—Notes on Construction—Length of Bars—Shuttering—Striking of Shuttering—Materials—Continuous Beams—Wall and External Beams—Single-Span Beams—Continuous-Span Beams—Modifications to Sections of Beams.

CHAPTER V.—Lintels. . . . . 44
Shuttering—Reinforcement—Lifting.

CHAPTER VI.—Floor and Roof Slabs . . . . . 49
Loading and Support of Slabs—Centering—Placing Reinforcement—Concreting—Finishes to Slabs—Single-Span Slabs—Continuous-Span Slabs—Quantities—Roof Slabs.

CHAPTER VII.—Panel Walls . . . . . 60

CHAPTER VIII.—Staircases . . . . . 62
Pre-cast Steps—In Situ Stairs—Section of Steps—Baluster Fixing—Surface Finish—Constructional Details—Reinforcement—Shuttering.

CHAPTER IX.—Saw Tooth Roofs . . . . . 77
Method of Manufacture—Reinforcement—Handling Trusses—Design of Trusses.

CHAPTER X.—Water Tanks . . . . . 92
Tanks above Ground Level—Floor—Walls—Quantities. Tanks below Ground Level—Quantities—Modifications for Smaller Tanks.

CHAPTER XI.—Retaining Walls . . . . . 102
Excavation—Shuttering—Reinforcement—Removal of Shuttering—Modifications for Lower Walls—Expansion Joints—Returns and Angles—Sloping Sites.

Index . . . . . 113

Books on Concrete . . . . . 114

## CHAPTER I

# GENERAL SPECIFICATION AND NOTES

THE following notes should be carefully studied in connection with the designs for the reinforced concrete work described in this book. The working stresses in the designs do not exceed 600 lb. per sq. in. in the concrete or 16,000 lb. per sq. in. in the steel.

(1) REINFORCEMENT.—The reinforcement is to consist of mild steel bars to British Standard Specification No. 785 for Rolled Steel Bars for Concrete Reinforcement (i.e. ultimate tensile strength, 28 to 33 tons per square inch).

Bars must be cleaned of all scale, dust, dirt, oil, and loose rust before being placed in position.

Every bar is to be inspected before assembling on the work and any defective or burnt bar removed.

Welding to lengthen bars is not permitted except in special cases. (See also Bending—Clause 9.)

(2) TYING WIRE.—This shall consist of No. 16 S.W.G. annealed soft iron wire cut into conveniently short lengths for tying bar crossings. Length of pieces varies from 4½ in. to 11 in. according to the diameter of the bars tied.

(3) CEMENT.—Only approved Portland cement from recognised reliable makers shall be used. Ordinary Portland cement (O.P.C.) and rapid-hardening Portland cement (R.H.P.C.) shall conform to the current British Standard Specification. High alumina Cement (H.A.C.) shall conform to British Standard Specification No. 915 and may be substituted for the above; it is more expensive, produces a stronger concrete, and is useful for concreting in cold weather and for obtaining very early strengths. Different cements must not be mixed and used together. This is particularly important when using H.A.C., and all tools and mixers must be scrupulously cleaned before changing from one type of cement to the other.

The cement manufacturer's signed certificate shall accompany each consignment, stating the results of tests.

The cement shall be delivered in properly sealed bags or sacks, and shall be carefully protected against adverse weather conditions at all times. It shall be stored in a perfectly waterproof and reasonably airtight shed of which the floor is raised from the ground. If kept for any length of time before being used the bags should be emptied into bins or compacted heaps. Partially set, lumpy, or otherwise damaged cement shall not be used.

Cement should be measured by weight, preferably using the 1-cwt. bag as a unit, but if gauge boxes are used the following figures give the approximate density:

1 cu. ft. of O.P.C. weighs 90 lb.
1 ,, ,, R.H.P.C. ,, 80 ,,

(4) COARSE AGGREGATE shall consist of broken stone or gravel crushed to pass through a $\frac{3}{4}$-in. ring but not through a $\frac{3}{16}$-in. ring, and the sizes of these particles shall be graded uniformly between these limits. They shall also be cubical or spherical in shape, not thin or flaky.

Unless perfectly clean the aggregate shall be thoroughly washed. If crushed stone is used care must be exercised that too much stone dust does not adhere to the surface of the particles. For water containers or retainers, i.e. tanks, basements, etc., the aggregate shall be non-porous or non-absorbent.

Aggregate shall be measured separately and by volume in a prepared gauge box.

(5) SAND (or fine aggregate).—Sand shall be perfectly clean and composed of hard siliceous or other approved mineral grains. It shall be free from clay, loam, and any animal, vegetable, bituminous, or other deleterious matter. Unless initially clean all sand shall be thoroughly cleaned by washing in flowing water.

Sand shall, if possible, be evenly graded from the maximum size of particle of $\frac{3}{16}$ in. downwards, but shall not contain more than 5 per cent. of fine grains that pass a No. 100 B.S. sieve.

Sand shall be measured separately and by volume in a prepared gauge box.

(6) WATER.—Only clean fresh water shall be used, free from earthy, vegetable, and organic matter; also free from acid or alkaline substances in solution or suspension in sufficient quantity to affect the concrete or work adversely in any way.

(7) CONCRETE PROPORTIONS.—The concrete shall be composed of cement, sand, and coarse aggregate in the following proportions:

Four parts of coarse aggregate, two parts of sand, and one part of cement, all by volume: say, 10 cu. ft. of coarse aggregate, 5 cu. ft. of dry sand, and $2\frac{1}{2}$ cu. ft. of cement. It is always preferable, however, to measure the cement by weight, in which case the above proportions equal 10 cu. ft. coarse aggregate, 5 cu. ft. sand, and 2 cwt. of cement when O.P.C. is used. When R.H.P.C. is used the weight of cement may be reduced to 200 lb. A batch of these volumes will usually yield 11 to 12 cu. ft. of finished concrete, depending on the shape and grading of the aggregate.

Aggregates shall be measured in correctly proportioned gauge boxes

by completely filling and levelling off; the following sizes are required for the mix given above—all three boxes are 24 in. square internally on plan:

| | | | | | | |
|---|---|---|---|---|---|---|
| Height of | coarse aggregate | box | 30 in. | (internal). | | |
| ,, | sand | ,, | ,, 15 | ,, | ,, | for dry or saturated sand. |
| ,, | ,, | ,, | ,, 17 | ,, | ,, | ,, damp sand. |
| ,, | cement | ,, | ,, $7\frac{1}{2}$ | ,, | ,, | |

On works of average size it will be found more convenient to use one bag of cement (112 lb.) per mix; this requires half the above volumes of aggregate and sand and will yield about $5\frac{3}{4}$ cu. ft. of concrete. One box of $2\frac{1}{2}$ cu. ft. capacity, say, 24 in. × 12 in. × 15 in. high, will suffice, using 1 box of sand and 2 boxes of aggregate to 1 bag of cement.

It should be noted that moisture can increase considerably the volume of sand. Unless proper measurements of water content and bulking are made, the volume of sand, if measured when moist, should be increased by $12\frac{1}{2}$ per cent. over that given above for dry sand.

If hand mixing is employed, or if the aggregate and sand are mixed before being put into the mixer, the two first boxes need not have bottoms, but they must be used on a clean board or staging. When feeding the mixer the ingredients must be fed into it in the order given above.

The least quantity of water shall be added that will produce a workable concrete suitable for the portion of the structure in question and having regard to the weather conditions prevailing, i.e. sufficient to allow of a plastic mixture being tamped into all parts of the mould and between the reinforcement. The most satisfactory method of controlling the water content and attaining consistency is by means of the slump cone test, particulars of which can be found in "The Concrete Year Book" and other publications.

(8) CONCRETE MIXING.—Whenever possible, concrete is to be machine-mixed in a batch mixer. The time of mixing will depend on the machine used, but must not be less than 2 minutes or more than 10 minutes in normal circumstances.

All mixed concrete shall be deposited immediately if possible. At the most it must be used within 30 minutes from the commencement of the mixing even under the most favourable weather conditions, and any concrete not placed within this period must not be used. Great care must be taken, particularly in hot weather, that no set or partially-set concrete is used. Retempering will not be permitted.

The machine shall be washed out and the drum left clean when it is to be shut down for more than 15 minutes.

If hand mixing is undertaken the following rules must be observed:

1. After gauging the aggregate and sand shall be thoroughly mixed and spread over a watertight mixing board.

2. The cement shall be added and the whole mass again thoroughly mixed.

3. A measured quantity of water shall then be applied through a rose or perforated nozzle of a watering can. So far as possible the batches shall always be brought to the same degree of wetness.

4. After wetting, all ingredients shall be turned over three times or more until the concrete has an even consistency throughout.

All tools and conveying equipment shall be cleaned of adhering concrete after concreting is finished.

Concrete proportioned and mixed as described should yield a cube crushing strength of not less than 1,350 lb. per square inch at 7 days and 2,250 lb. per square inch at 28 days after mixing.

(9) BENDING REINFORCEMENT.—All bends must be made accurately, special care being taken to ensure that the depth or crank is correct. The bends are to be of easy radius, say, 10 diameters of the bar bent, except in special cases such as right-angle bends and hooks when the inner radius must not be less than two diameters. If any difficulty is experienced, or damage occurs, owing to bending the bars cold, they should be heated but not beyond a dull red glow; they shall be allowed to cool slowly and not suddenly by applying water or other liquid.

Unless otherwise stated hooks shall be of the standard pattern shown below.

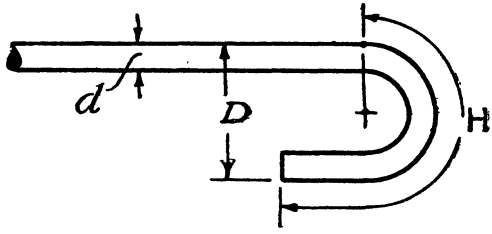


| Diameter of bar "d" in inches. | Minimum outside diameter of hook D in inches | Length of hook from straight in inches H. |
|---|---|---|
| $\frac{1}{4}$ and $\frac{5}{16}$ | 2 | 4 |
| $\frac{3}{8}$ | 3 | 5 |
| $\frac{7}{16}$ and $\frac{1}{2}$ | 3 | 6 |
| $\frac{5}{8}$ | 4 | 6 |
| $\frac{3}{4}$ and $\frac{7}{8}$ | 5 | 9 |
| 1 | 6 | 12 |

(10) PLACING REINFORCEMENT.—All bars for any portion of the work are to be bent, placed carefully and correctly in position, and firmly wired together before concreting is commenced. To aid placing, notched boards or other templates may be used. It is essential that the smaller bars, stirrups, and links be as carefully placed as the larger bars. The reinforcement is to be wired at a sufficient number of crossings with No. 16 S.W.G. wire to hold it securely during concreting and ramming. Wood blocks must not be used as spacers. When spacers are necessary, as, for example, to support the slab bars above the slab shuttering, short lengths of bar, equal in diameter to the cover required, may be employed and withdrawn as concreting proceeds so as not to leave cavities or disturb the set; or preferably small cement mortar or concrete blocks of depth equal to the cover can be cast into the work.

Wherever possible bars should be wired into a frame or mesh before placing in the forms.

The reinforcement must be clean; a stiff wire brush shall be used to remove scale or loose rust. On no account shall bars be oiled or painted.

Bars must be of the proper length and no splicing of the reinforcement shall be undertaken.

(11) LAPS.—Where cross-bars or distribution bars are lapped the following standard laps are the minimum permissible:

| Diameter of bar. | Lap. |
|---|---|
| $\frac{1}{4}$ in. | 1 ft. 3 in. |
| $\frac{5}{16}$ ,, | 1 ,, 6 ,, |
| $\frac{3}{8}$ ,, | 1 ,, 9 ,, |
| $\frac{7}{16}$ ,, | 2 ,, 0 ,, |
| $\frac{1}{2}$ ,, | 2 ,, 6 ,, |
| $\frac{5}{8}$ ,, | 3 ,, 0 ,, |

(12) COVER.—The cover of concrete, i.e. distance between the outside of the concrete and the nearest part of the bar, to be as under:

$\frac{1}{2}$ in. for slab bars.
1 in. for beam and column bars.

Exterior columns, however, should have $1\frac{1}{2}$ in. cover. Any work which will be in contact with sea water or sewage at any time should have the above cover distances doubled.

(13) SHUTTERING.—The shuttering, formwork, or centering shall be true to line and strong enough to hold the wet concrete and any incidental superimposed load without appreciable settlement, deflection, or vibration. It must be sufficiently tight to prevent leakage of mortar. Special care shall be taken to prevent bulging. Wrought timber free from knots and defects shall be used for exterior surfaces or those exposed

to view. Before shutters are used for a second or third time they must be cleaned and old nails, etc., withdrawn. A slight camber of ¼ in. per ten feet of span is to be given to all beams in addition to any inclination or curves of the soffits shown on the drawings.

All internal and external angles of beams and columns shall be provided with fillets 1 in. by 1 in. The inside of the shuttering shall be coated with non-staining mineral oil, limewash, or other approved material, or be thoroughly wetted (except during freezing weather). Where oil is used it shall be applied before the reinforcement is placed.

Temporary openings shall be provided at the base of column and wall shutters and at other points where necessary to facilitate cleaning and inspection immediately before depositing concrete.

Props or struts under centering shall be supported on folding wedges on sole plates large enough to prevent settlement.

Unless all the shuttering can be left in position until the beams are struck, it must be so arranged that the sides of the columns and wall shall be first removed, then the sides of beams and soffits of slabs, and finally the soffits of the beams themselves without the operations causing any disturbance to the shuttering left in position.

In the design and construction of shuttering the use of nails shall be reduced to a minimum in favour of bolts and clamps at the junction of removable units, so that shock and undue force are eliminated during the striking of the units.

There are now many substitutes for timber as shuttering, such as metal and concrete forms and planks. Many types are sold as proprietary articles but much can be done by improvisation on a site with available materials, provided the correct principles are followed.

(14) Placing Concrete.—It is very important that only clean tools and utensils be used. Before depositing concrete, examine the shuttering and remove dirt, loose stones, shavings, etc., and thoroughly wet, oil, or limewash interior of moulds. Clean, wash, and well brush over with thick cement grout the surfaces of concrete previously placed to which the new concrete is to adhere. Examine and check reinforcement, particularly for position and security during ramming.

The concrete shall be taken as quickly as possible and deposited gently into position, where it shall be rodded and rammed thoroughly around the bars and into the corners of the moulds. Concrete must not be tipped or dropped from a height. It is essential that a dense concrete be formed and that no voids and cavities are left; this can only be assured by thorough and repeated rodding and ramming.

Flat-bladed steel tools should be made for working the concrete against the faces of beams, etc., and to procure a good surface.

It is very important that bars are not displaced during concreting;

also great care must be taken that bars which project from concrete that has just been placed are not shaken or disturbed, as this will destroy the strength of the concrete after initial set where it touches the bars and its full strength will never be recovered. Concrete that has been tamped and finished must not be disturbed again for the same reason.

(15) WHERE TO STOP WORK.—When concreting is once commenced it must be carried on without stopping until the work or a pre-arranged portion of the work is completed. Where a cessation of work is unavoidable, the break must be made in the centre of the span of beams or slabs which are in course of construction by a vertical joint at right angles to the direction of the span of the beam or slab, a temporary board being inserted across the beam or slab so that the concrete can be rammed hard against it. It is of importance that no joint should be made towards the ends of beams or slabs or close to a concentrated load.

(16) VIBRATION.—On works where it is possible and expedient to use mechanical vibration for consolidating the concrete, this process gives excellent results if it is properly controlled. It requires particular attention to details and experienced operatives. Owing to the greater consolidation and rate of pouring, especially if used in conjunction with a concrete pump, the shuttering needs to be stouter and closer tied or braced to withstand additional side pressure on vertical or inclined shuttering. The consistency of the concrete must be much drier than for hand tamping and must be rigorously controlled. There are two types of vibrator: (1) the external or fixed type which is clamped on to the outer framework of the shuttering, and (2) the internal or immersion vibrator which is pushed into the wet concrete by hand. The latter is made in varying diameters to suit massive or intricate work. Both types may be obtained for operation by electricity or compressed air. When vibration processes are used, tests should be made on the aggregates and samples of finished concrete before any placing in work is undertaken, and the advice of specialists in vibration should be taken and closely followed. It should be noted that the increased density resulting from vibratory consolidation will require more materials, usually from 5 per cent. to 10 per cent., compared with hand tamping. The increased strength of vibrated concrete is due to two factors, namely, the greater compactness of the material and the fact that concrete of a drier consistency can be properly consolidated than is the case when hand tamping is used in confined spaces.

(17) RECOMMENCING WORK.—Wherever a stop has been made in concreting, before restarting the work the surface of the existing concrete must be carefully roughened, cleaned, washed with a stiff brush to remove loose particles, and a thick grout of neat cement must be worked over it immediately before the new concrete is rammed against it.

(18) MATURING OF CONCRETE.—No concreting is to be undertaken if the temperature is liable to fall to or near freezing point. If there is a possibility of frost after any concreting has been completed it must be carefully covered over with sacking, straw, etc. The shuttering must not be struck before the usual period specified for any member plus one day for every day on which the thermometer has fallen below 40 deg. F. The danger of damage by frost is greatly reduced by the use of rapid hardening Portland or high-alumina cement or by the addition of not more than 2 per cent. by weight of calcium chloride to O.P.C.

In addition to the protection of new concrete against frost, great heat, or drying winds, it must be well watered daily for at least 7 days if O.P.C. is used. When R.H.P.C. is used particular care must be taken that the concrete is kept very wet for the first 3 days, and then daily as long as possible. H.A.C. concrete must be kept very wet for 8 hours.

(19) COLUMNS.—The shutters on three sides should first be placed in position, and the reinforcement, previously wired into a frame, fixed within. The concrete is then placed in position through the fourth side of the column, the shuttering to this fourth side being brought up as the concreting proceeds.

If the column is filled from the top great care must be taken to avoid displacing the links; the concrete must be deposited in layers not exceeding 6 in. at a time and must be well rodded. It is most important that the ramming be very thorough, and a long narrow grafting tool should be employed for this purpose. Columns or supports shall be concreted in horizontal layers to between 2 to 4 in. below the soffit of the beam or haunch. On restarting the joint must be carefully examined, washed, and cleaned, and covered with cement grout.

(20) BEAMS.—If any difficulty is found in getting the concrete to pass between the lower bars in the rib of a beam, the first inch or two of concrete may be made of a finer and more liquid consistency than that used elsewhere. The mould must not be filled to the underside of bars and then the bars placed within; all reinforcement must be placed and securely wired before concreting. If for any special reason it is found necessary to construct the portion of the beam which projects below a slab (i.e. the rib) before the slab itself is poured, it is important that the joints are not left too long, are treated as mentioned in clause 17, and are provided with ample reinforcement projecting up from the rib into the slab. It is always desirable to cast them together so that they will be monolithic.

(21) SLABS.—The slab bars must be placed in position, wired together at their crossings, and wired to the top beam-bars before concreting is commenced. Notched boards should be used as templates for bar centres. Care must be taken that the bars do not fall over or become

displaced during concreting; they must be raised above the centering by removable bars or concrete or mortar blocks. Walking and wheeling boards must be arranged above the bars so as not to transmit any load or vibration to the bars by workmen, barrows, etc.

(22) FITTINGS AND ACCESSORIES.—Bolts, sockets, pipe hooks, etc., shall be built in accurately as work proceeds. No cutting out afterwards will be allowed as this may seriously impair the strength of the member.

(23) REMOVAL OF SHUTTERING.—The shuttering shall be removed in the order mentioned in clause 13 and after the periods specified below. Before any striking is commenced the concrete shall be examined to ascertain that it has set and hardened properly. Great care must be exercised during removal to avoid shock or reversals of stress owing to some supports being lowered quicker than others. Striking must only be carried out under the direct supervision of the person in charge of the work. The following periods are given as a guide for normal maturing conditions and they must be lengthened when necessary, such as, for instance, after frost, when one day will be added for every day on which the thermometer has fallen below 40 deg. F.

The minimum periods after the last pouring are as follows:

| Portion of structure. | Using O.P.C. | Using R.H.P.C. |
|---|---|---|
| Foundation sides . . . . . | 3 days | 2 days |
| Column sides . . . . . | 5 days | 3 days |
| Wall sides . . . . . | 3 days | 2 days |
| Slab soffits (up to 6 ft. span) . . | 7 days | 4 days |
| ,, ,, (over 6 ft. span) . . | 10 days | 5 days |
| Beam sides . . . . . | 5 days | 3 days |
| Beam soffits . . . . . | 21 days | 10 days |

When high-alumina cement is used all portions may be struck after 18 hours.

Where upper floors are propped from lower ones, props must be left under the latter until props are removed.

No heavy or concentrated loads shall be allowed to come on the work until the expiration of the periods in clause 24.

(24) FULL WORKING LOAD AND TEST LOAD.—The full working load and test loads shall not be allowed on the work until the following periods have elapsed after the shuttering has been removed. The test load shall not exceed one and a half times the working load for which the work has been designed.

With high-alumina cement the working or test load may be put on 18 hours after striking in the case of the designs in this book.

| | Using O.P.C. | Using R.H.P.C. |
|---|---|---|
| Full working load for which work has been designed . . . . . | 6 weeks | 3 weeks |
| Test load . . . . . | 8 weeks | 4 weeks |

(25) SURFACE FINISH.—Surfaces hidden from view shall be as left from the shuttering providing they are reasonably smooth. Surfaces that will ordinarily be visible shall be rubbed down with a carborundum brick to remove board marks, etc. Any cavities are to be neatly pointed in cement mortar. The whole surface should be given a wash of cement grout or other material so as to present finally an even colour throughout.

(26) WEIGHTS OF STEEL REINFORCEMENT AND CONCRETE.

TABLE I.

WEIGHT OF STEEL BARS PER FOOT RUN.

| Diam. in in. | Wt. in lb. | Diam. in in. | Wt. in lb. |
|---|---|---|---|
| $\frac{3}{16}$ | 0·094 | $\frac{1}{2}$ | 0·668 |
| $\frac{1}{4}$ | 0·167 | $\frac{5}{8}$ | 1·04 |
| $\frac{5}{16}$ | 0·261 | $\frac{3}{4}$ | 1·50 |
| $\frac{3}{8}$ | 0·376 | $\frac{7}{8}$ | 2·04 |
| $\frac{7}{16}$ | 0·510 | 1 | 2·67 |

Concrete weighs about 144 lb. per cubic foot, and so, for instance, the weight ($w$) of a 1-ft. length of a column 18 in. square is $w = 1 \times \frac{18}{12} \times \frac{18}{12} \times 144 = 324$ lb. In other words, the weight per foot length of a column, beam, or other member is numerically the same as the area of its cross section in square inches. In the same way the weight per square foot of a concrete slab (in pounds) is twelve times its thickness in inches.

## CHAPTER II

# FOUNDATIONS

THE foundations treated herein comprise the simpler types, viz. foundations to concrete columns, steel stanchions, walls, and small raft foundations for buildings.

Of all the members of a structure it is for several reasons false economy to skimp the design of and quantities in foundations. First, on their rigidity depends the stability of the whole structure, and should any serious settlement take place, owing to over-rating of the capability of the ground of sustaining pressure, it is a most difficult and exceedingly costly matter to rectify, even if the building has not been pronounced dangerous and unsafe. Second, as the work in connection with foundations occurs near or just below ground level, the cost per cube foot of concrete is usually a minimum here, so that really very little total cost is saved by reduction.

Probably the most common fault in small foundation work is that of not taking it deep enough. This is a very general and often obvious defect in much house property, both old and new, where differential settlement is regarded more as a necessary and expected evil (no doubt consequent on economic pressure) rather than the fruits of negligence. Apart from the actual carrying capacity of the ground it should be remembered that the effect of weather changes, particularly frost and drought, are felt some distance down. The depth will vary with the nature of the soil and subsoil, climatic conditions, etc., but generally speaking in England in average ground the effects are in due time apparent where the depth is under 3 ft. The external or exposed footings should therefore always be taken deeper than this, unless other circumstances render it unnecessary.

A further point to be watched is to see that the load in all cases comes down over the centre of gravity of the foundation, otherwise eccentricities and probably unequal settlements will take place, tipping the footing or overstraining the columns above.

### Safe Loads on Ground.

As the strata forming the surface of the earth vary from site to site, and pass through every gradation from hard rock to soft mud, it is obviously impossible to define precisely the limits of any particular type, such as clay. The final arbiter of the safe bearing value of any particular surface will be practical experience and judgment; nevertheless the

following table will serve as an approximate guide. It may also be remembered that in some comparatively soft strata, such as sand, higher permissible pressures can be obtained by taking the foundation much deeper.

| Description of Ground. | Maximum allowable bearing pressure in tons per sq. ft. |
|---|---|
| Silt, morass, mud, peat, alluvial deposits, made up ground tipped not less than 10 years . | 0—¼ |
| Natural bed of soft clay, wet or loose sand, soft sandstone . . . . . | 1 |
| Natural bed of ordinary clay or confined sand . | 2 |
| Natural bed of compact gravel, stiff clays and solid chalk . . . . . | 4 |
| Natural beds of hard sandstones, limestones, etc. | 6—10 |
| Natural beds of igneous rocks (granites, whinstones, etc.) . . . . . | 15 upwards |

## Foundations for Reinforced Concrete Columns and Steel Stanchions.

The loads to be carried may be computed in the manner given for columns. *Tables* 2, 3 and 4 give the sizes necessary, and the design for isolated or "blob" foundations to carry the maximum loads specified on ground capable of safely sustaining 1, 2 and 4 tons per sq. ft. When supporting steel stanchions, base-plates to the latter must be provided, and when supporting concrete columns lap bars must be provided (see *Fig.* 1) of at least the same diameter and number as the column bars. Lap bars must extent from 1 in. above the foundation base to a height 24 times their diameter up the column, well bound with links and secured by one or two links within the base itself. To secure stanchion base-plates, bolts must be cast in or other provision made. If holes are left the foundation should be brought up square (as shown dotted) and not sloped. *Fig.* 1 shows a typical elevation and plan of the foundations.

It will be noted that the size of the foundation at its top (B), where the slope from the minimum 6-in. thickness finishes, must not be less than one-quarter or one-fifth of the side of the foundation according to the ground pressure selected. They may, of course, be brought up square to their full height (T), as indicated by the dotted lines. Thus at the cost of a small extra expenditure of concrete the difficulty of shuttering and concreting the upper slopes may be obviated.

TABLE 2.

SQUARE FOUNDATIONS.

*For safe ground pressure of 1 Ton per sq. ft.*

| Maximum Load to be Carried. tons. | Size in Plan S ft. and ins. | Thickness T ins. | Reinforcement. Number of bars each way. | Reinforcement. Diam. of bars ins. | Notes. |
|---|---|---|---|---|---|
| 4 | 2·0 × 2·0 | 8 | 4 | 5/16 | 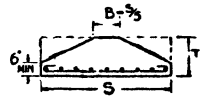 |
| 6 | 2·6 × 2·6 | 9 | 4 | 3/8 | |
| 9 | 3·0 × 3·0 | 11 | 5 | 3/8 | |
| 12 | 3·6 × 3·6 | 12 | 6 | 3/8 | |
| 16 | 4·0 × 4·0 | 14 | 8 | 3/8 | |
| 20 | 4·6 × 4·6 | 15 | 8 | 7/16 | |
| 25 | 5·0 × 5·0 | 18 | 9 | 7/16 | |
| 36 | 6·0 × 6·0 | 21 | 9 | 1/2 | B must not be less than S/5. Footings may be made as shown by dotted lines. |
| 49 | 7·0 × 7·0 | 24 | 12 | 1/2 | |
| 64 | 8·0 × 8·0 | 27 | 10 | 5/8 | |
| 81 | 9·0 × 9·0 | 30 | 14 | 5/8 | |
| 100 | 10·0 × 10·0 | 32 | 12 | 3/4 | |



TABLE 3.

SQUARE FOUNDATIONS.

*For safe ground pressure of 2 Tons per sq. ft.*

| Maximum Load to be Carried. tons. | Size in Plan S ft. and ins. | Thickness T ins. | Reinforcement. Number of bars each way. | Reinforcement. Diam. of bars ins. | Notes |
|---|---|---|---|---|---|
| 8 | 2·0 × 2·0 | 9 | 4 | 5/16 | |
| 12 | 2·6 × 2·6 | 12 | 4 | 3/8 | |
| 18 | 3·0 × 3·0 | 14 | 5 | 7/16 | |
| 24 | 3·6 × 3·6 | 15 | 5 | 1/2 | |
| 32 | 4·0 × 4·0 | 18 | 7 | 1/2 | B must not be less than S/4. Footings may be made as shown by dotted lines. |
| 40 | 4·6 × 4·6 | 20 | 8 | 1/2 | |
| 50 | 5·0 × 5·0 | 21 | 7 | 5/8 | |
| 72 | 6·0 × 6·0 | 26 | 7 | 3/4 | |
| 98 | 7·0 × 7·0 | 30 | 9 | 3/4 | |

TABLE 4.

SQUARE FOUNDATIONS.

*For safe ground pressure of 4 Tons per sq. ft.*

| Maximum Load to be Carried. tons | Size in Plan S ft. and ins. | Thickness T ins. | Reinforcement. Number of bars each way. | Reinforcement. Diam. of bars ins. | Notes. |
|---|---|---|---|---|---|
| 10 | 1·6 × 1·6 | 10 | 4 | $\frac{5}{16}$ | |
| 16 | 2·0 × 2·0 | 12 | 5 | $\frac{3}{8}$ | |
| 24 | 2·6 × 2·6 | 15 | 5 | $\frac{7}{16}$ | |
| 36 | 3·0 × 3·0 | 18 | 6 | $\frac{1}{2}$ | As before, i.e. B must not be less than S/4. |
| 48 | 3·6 × 3·6 | 21 | 7 | $\frac{1}{2}$ | |
| 64 | 4·0 × 4·0 | 24 | 6 | $\frac{5}{8}$ | |
| 80 | 4·6 × 4·6 | 27 | 8 | $\frac{5}{8}$ | |
| 100 | 5·0 × 5·0 | 30 | 7 | $\frac{3}{4}$ | |

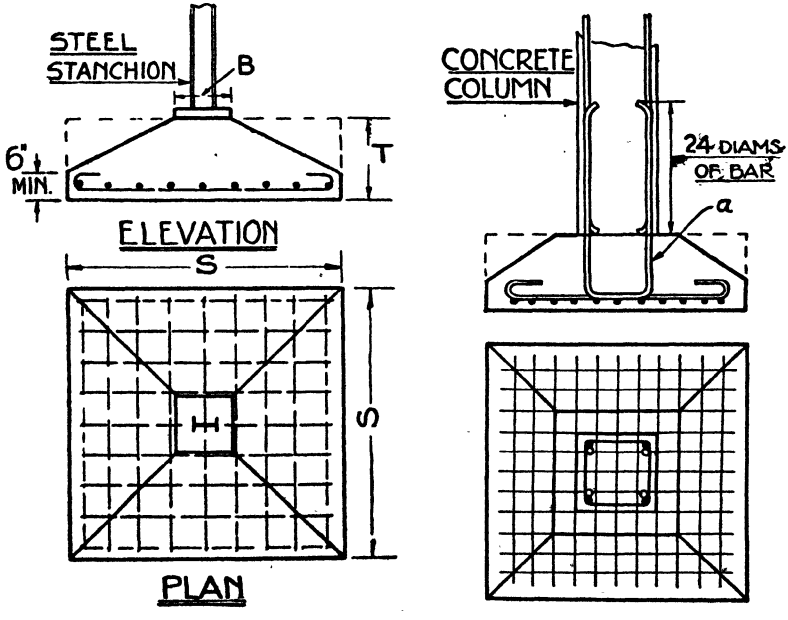


FIG. 1.

All the foundations have been designed so that the following stresses are not exceeded:

Compression in concrete = 600 lb. per sq. in.
Tension in steel = 16,000 lb. per sq. in.

for which 1 : 2 : 4 Portland cement concrete and mild steel are suitable.

## Excavation.

The holes for isolated foundations must be taken to a level bottom and, where necessary, they must be timbered to prevent earth falling in. Also, unless the excavation is very compact and dry, or consists of rock, two or three inches of concrete should be spread over the bottom and levelled to form a firm and clean bottom from which to work.

## Reinforcement.

As will be seen from *Fig.* 1, the reinforcement consists of a mesh of bars, hooked both ends, wired up at each crossing and placed in the bottom of the foundation. The cover under the bars less than ½-in. diameter is to be ½ in., and for ½-in. bars and over, 1 inch. It should be noted that the number of bars given in the tables is for one direction or layer only. The lengths of the bars are as under, where S represents the side of the foundation.

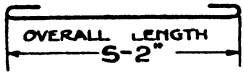


| DIAM: OF BAR | - | 3/8" & UNDER, | 1/2" & 7/16", | 5/8" & 3/4". |
|---|---|---|---|---|
| TOTAL LGTH: REQD:- | | S+6", | S+9"; | S+12". |

The mesh can be supported on four small blocks or stools of concrete ½ in. or 1 in. thick, or on bars of those diameters. The lap bars *a* (*Fig.* 1) must also be placed in position and secured by cross bracing to the shuttering before commencing to place the concrete in the foundation.

## Shuttering.

If the sides are taken up vertically to the top a hollow box must be constructed, sides only, without top and bottom, to be rigid when full of concrete and while being tamped.

In the case of sloped foundations the box must extend to the 6-in. height, after which trapezoidal boards must be fixed to shutter the slopes. It is essential that this be done so that the concrete can be thoroughly rammed against the underside of the mould to produce a dense concrete on top; to attempt to concrete without the sloping boards is slovenly and most inefficient.

An illustration of the two types is given in *Fig.* 2, from which the method of construction can be clearly seen.

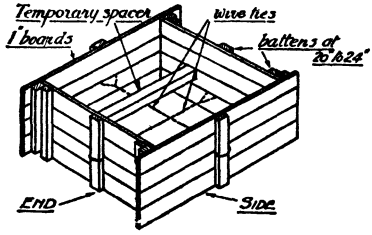


SHUTTERING FOR SQUARE FOUNDATIONS.

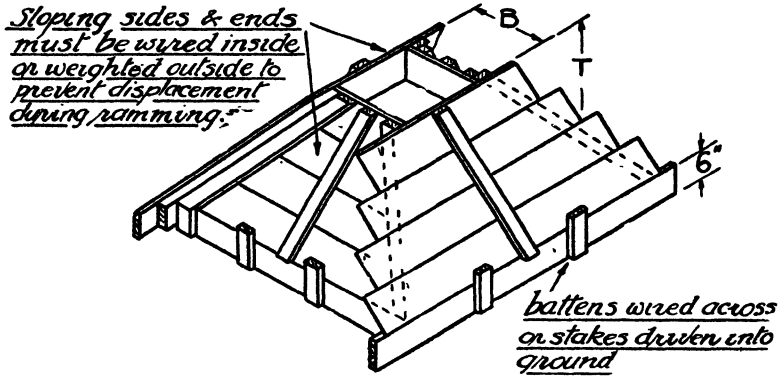


SHUTTERING FOR SLOPING TOP FOUNDATIONS.

FIG. 2.

## Quantities.

The volume of concrete and the weight of steel [both layers taken; but excluding column lap bars which will depend on the design of the column (see Chapter III)] are given in *Table* 5. The quantities of concrete have been taken out for both the square type and the sloping type of foundation; the steel, however, remains the same in both cases.

TABLE 5.

QUANTITIES IN FOUNDATIONS.

| Footing. | | Quantities. | | | Footing. | | Quantities. | | |
|---|---|---|---|---|---|---|---|---|---|
| Size in ft. and in. S | Thickness in in. T | Concrete in cube feet. Square type | Concrete in cube feet. Sloping type | Steel lb. | Size in ft. and in. S | Thickness in in. T | Concrete in cube feet. Square type | Concrete in cube feet. Sloping type | Steel. lb. |
| 1.6 × 1.6 | 10 | 1·87 | 1·45 | 4·2 | 4.6 × 4.6 | 15 | 25·3 | 16·3 | 43·5 |
| 2.0 × 2.0 | 8 | 2·66 | 2.28 | 5·25 | | 20 | 33·6 | 20·5 | 56·0 |
| | 9 | 3·0 | 2·44 | 5·25 | | 27 | 45·5 | 25·6 | 91·0 |
| | 12 | 4·0 | 2·88 | 9·5 | 5.0 × 5.0 | 18 | 37·5 | 22·8 | 53 |
| 2.6 × 2.6 | 9 | 4·7 | 3·77 | 9·0 | | 21 | 43·7 | 26·1 | 89 |
| | 12 | 6·25 | 4·50 | 9·0 | | 30 | 62·5 | 34·3 | 126 |
| | 15 | 7·8 | 5·18 | 16·6 | 6.0 × 6.0 | 21 | 63 | 36·5 | 82 |
| 3.0 × 3.0 | 11 | 8·25 | 6·04 | 13·2 | | 26 | 78 | 44·0 | 146 |
| | 14 | 10·50 | 7·12 | 18·0 | 7.0 × 7.0 | 24 | 98 | 55 | 125 |
| | 18 | 13·50 | 8·44 | 30·0 | | 30 | 123 | 68 | 215 |
| 3.6 × 3.6 | 12 | 12·2 | 8·64 | 18·0 | 8.0 × 8.0 | 27 | 144 | 78 | 188 |
| | 15 | 15·4 | 10·1 | 28·5 | | | | | |
| | 21 | 21·5 | 12·8 | 40·0 | 9.0 × 9.0 | 30 | 203 | 108 | 292 |
| 4.0 × 4.0 | 14 | 18·7 | 12·4 | 27·0 | 10.0 × 10.0 | 32 | 267 | 139 | 396 |
| | 18 | 24·0 | 15·0 | 44·5 | | | | | |
| | 24 | 32·0 | 18·5 | 62·4 | | | | | |

## Wall Foundations.

The advantages gained by using reinforced concrete foundations compared with ordinary mass concrete foundations for masonry or concrete walls lie in the fact that the load can be spread longitudinally as well as laterally, and this is often of great value in variable ground.

Thin concrete walls or brick panel walls in a frame building require, of course, only nominal foundations in ordinary ground. It must be remembered, however, that a reinforced concrete wall monolithic with columns at intervals will act as a deep beam and will either hang on the columns at its ends or will pick up load from the columns (to the relief of their foundations) and transfer it to the wall foundation should the latter not settle equally with the column foundations. This subject is too wide to be discussed further here, and in the event of such complications arising expert advice should be sought.

A suitable foundation for a light concrete panel wall (i.e. not carrying loads from floors above which are taken on the frame of beams and columns) is shown in *Fig.* 3.

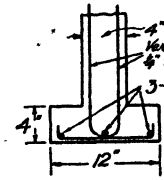


FIG. 3.

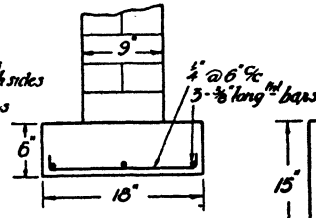


FIG. 4.

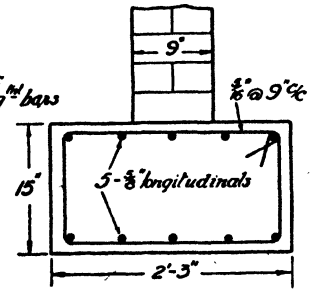


FIG. 5.

A brick panel wall 9 in. thick and 15 ft. high would be suitably served by the foundation shown in *Fig.* 4 in uniform and good ground. The pressure on the foundation is under half a ton per square foot, so that it would serve for most sites. For very poor sites, however, the width, depth, and reinforcement must be increased proportionately. In the case of variable ground with soft patches, considerable additional rigidity can be gained by increasing the depth of foundation, increasing the longitudinal reinforcement, and also by placing it in the top as well as in the bottom, as shown in *Fig.* 5. With the dimensions and reinforcement there shown, the foundation would span over a hole or soft patch 10 to 15 ft. in diameter.

## Foundations to Bearing Walls.

Masonry or concrete bearing walls transmit any superimposed loads plus their own weight right down to their foundations. They are thus often heavily loaded and are usually increased in width at each floor as they descend. The walls of an ordinary dwelling-house fall into this category, although in most cases the load per foot run of wall does not exceed 2 tons.

The first thing to be done in selecting a design is to take out the load per foot run of wall, by noting the number of floors and roof, their total load per square foot and their widths (usually half the span of the rooms) taking bearing on the wall. To these loads add the weight of brickwork, breastwork, etc., above the foundations.

Knowing the safe ground pressure it will then be possible to refer to *Table* 6 for the design. This table shows cross-sections of foundations required, but the depths may be increased at will. The widths given are the minima, but if made wider than shown for any particular case the depth and reinforcement must be increased in ratio to the foundations shown to their immediate right. The table also indicates the quantity of concrete and the weight of steel per foot run of wall.

As an example, suppose the wall load worked out at 2½ tons per foot run, and the ground pressure is not to exceed 1 ton per square foot. Obviously the 2-ton foundation (*e*) will give too high a ground pressure and we must take the 3-ton line, which, under the "1-ton" column, gives us foundation "*h*." The minimum width is 3 ft. and depth 7 in., while the reinforcement would be ½-in. bars hooked or turned both ends at 6-in. centres, placed across the footing, with four ⅜-in. crossbars running longitudinally to which the ½-in. bars are wired.

In the case of dwelling-houses it should be noted that the heaviest loads in most cases come down the internal walls, in spite of the fact that the latter are often built thinner than the external wall. The loads should be properly estimated and the foundations made wider than under external walls if the loads call for this, when the risk of unequal settlement and cracking will be minimised.

### Raft Foundations for Small Buildings.

Where the load per foot run of wall becomes very high, or where the capability of the ground for sustaining loads is very low, it sometimes becomes necessary to employ the whole area of the site to support the structure.

In the case of moderate-sized and small dwelling-houses and other buildings this limit is generally reached when the permissible ground pressure falls to or below ¼ ton a square foot. Owing to the diversity of planning it is obviously impossible to give a general design to suit all cases, and in the event of such bad ground being used as a building site a design must be prepared in accordance with the plan of the walls and dispositions of the loads in the case under consideration. For warehouses or tall buildings a complicated system of beams is usually necessary to strengthen the slab and to distribute the load evenly over the site.

However, where the allowable ground pressure does not fall much below ½ ton per square foot and the distances between walls are of the order of 12 to 15 ft., the site for a dwelling-house or similar small structure may be rafted by adopting under the walls the requisite foundation as given

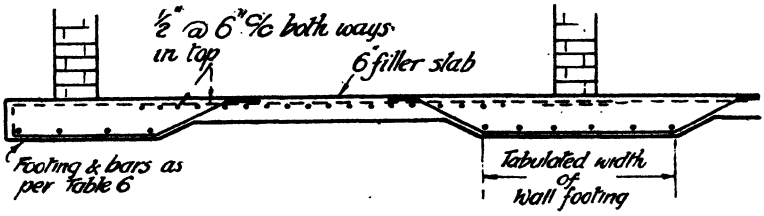


FIG. 6.

TABLE 6.

| LOAD PER FOOT RUN OF WALL TONS | ALLOWABLE GROUND PRESSURE IN TONS PER SQ. FOOT | | |
|---|---|---|---|
| | 2 | 1 | ½ |
| 1 | 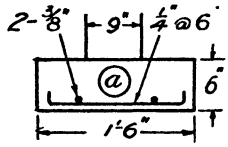 | 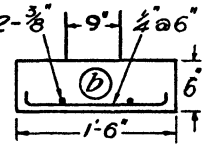 | 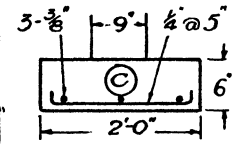 |
| | QUANTITIES PER FOOT RUN OF WALL | | |
| | CONCRETE CU-FT 0·75 / STEEL LBS 1·42 | CONCRETE CU-FT 0·75 / STEEL LBS 1·42 | CONCRETE CU-FT 1·0 / STEEL LBS 2·06 |
| 2 | 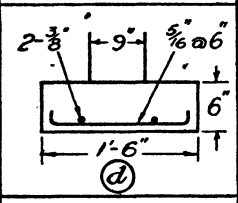 | 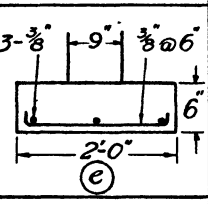 | 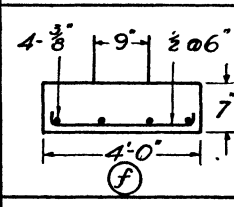 |
| | CONCRETE 0·75 / STEEL 1·81 | CONCRETE 1·0 / STEEL 3·03 | CONCRETE 2·34 / STEEL 7·9 |
| 3 | 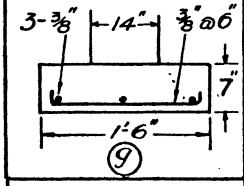 | 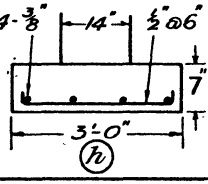 | 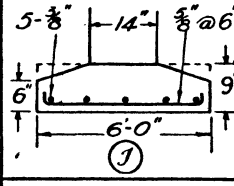 |
| | CONCRETE 0·875 / STEEL 2·63 | CONCRETE 1·75 / STEEL 6·7 | CONCRETE 3·9 / STEEL 7·1 |
| 4 | 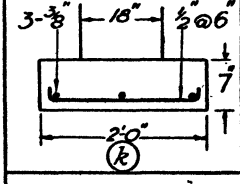 | 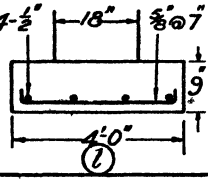 | 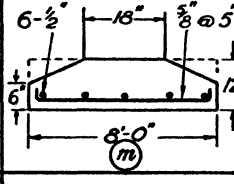 |
| | CONCRETE 1·17 / STEEL 4·95 | CONCRETE 3·0 / STEEL 11·7 | CONCRETE 6·37 / STEEL 26·5 |

under column " ½ ton " in *Table* 6, i.e. foundations *c*, *f*, *j*, or *m* ; then fill in between with a 6-in. slab reinforced with ½-in. bars at 6-in. centres in both directions in the top, as shown in *Fig.* 6. These bars should be carried right under the walls and be lapped 2 ft. there ; no laps must occur at the centre of the bays. Temporary supports are required to keep these bars in the correct position. The bars in the bottom of the wall foundations should be lengthened at both sides to extend well into this 6-in. slab, and if the wall foundation is deeper than the slab it should be sloped at 1 in 2 up to the underside of the 6-in. slab as indicated.

Suitable shuttering for wall bases is illustrated in *Fig.* 7.

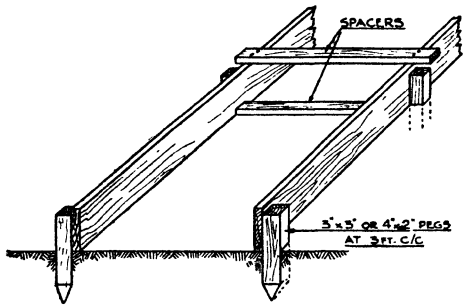


FIG. 7.—WALL BASE SHUTTERING.

## CHAPTER III

# COLUMNS

In designing a column the primary data required are, first, the maximum load it will have to carry; and, second, its unsupported length. The regulations also call for consideration of the bending moment induced in columns by beams running into them, by brackets, or by other eccentricities of load. A simple tabulation of these is impossible and, although the following designs of columns will usually be found to comply with statutory requirements, mathematical justification may be necessary and should certainly be made for a structure of any importance. The following designs require that the columns be held at their tops by beams entering them in two directions at right angles.

Considering the load first, this must consist of all weight, both "dead" loads (i.e. the weight of the structure above together with the weight of any walls carried, and the column itself and any other permanent load), and "live" loads (i.e. the applied loads carried by floors, incidental loads, snow and wind loads on roofs, etc.).

As columns or piers support beams and lintels, one method of arriving at the load to be carried is to add together the loads from all the beams at every level or floor commencing from the top or roof. Thus the load from the roof down to the topmost floor is ascertained, and this added to the sum of the loads on that floor plus the weight of the columns themselves, gives the total load to be carried down from the topmost floor, and so on down to the foundations. This is the most precise method and requires calculations for every separate beam.

In a straightforward rectangular building with normal column arrangement, however, the simpler method described below may be adopted with this caution:—that the loads should be deliberately over-estimated by 5 per cent. or more to allow for the monolithic nature or "continuity" of concrete beams, which results in an additional loading of some columns and a relief to others, in such a manner that will not be explained here but which can be calculated and foreseen by experienced designers.

Assuming a normal arrangement of columns as shown in *Fig.* 8, the area of floor carried by column *A* at any floor level is $15 \times 12$ square feet, where 15 and 12 are the distances in feet between the centres of lines of columns in two directions at right angles. This is the area of the rectangle *opqr* which, as will be seen, extends equally about column *A* to the centre points between the next columns in both directions. Similarly the area (sq. ft.) carried by column *B*1 is $\frac{15}{2} \times 12$ and by *B*2 $15 \times \frac{12}{2}$.

To the load carried by $B1$ the weight of the wall 12 ft. long must be added, and to the load on $B2$ the weight of 15 ft. of wall. Column $C$ carries $\frac{15}{2} \times \frac{12}{2}$, or only half the area of floor taken by $B1$ or $B2$, plus $\frac{15 + 12}{2}$ feet of wall, but it should not be made of less section than $B2$ owing to its corner position, which may introduce serious bending stresses.

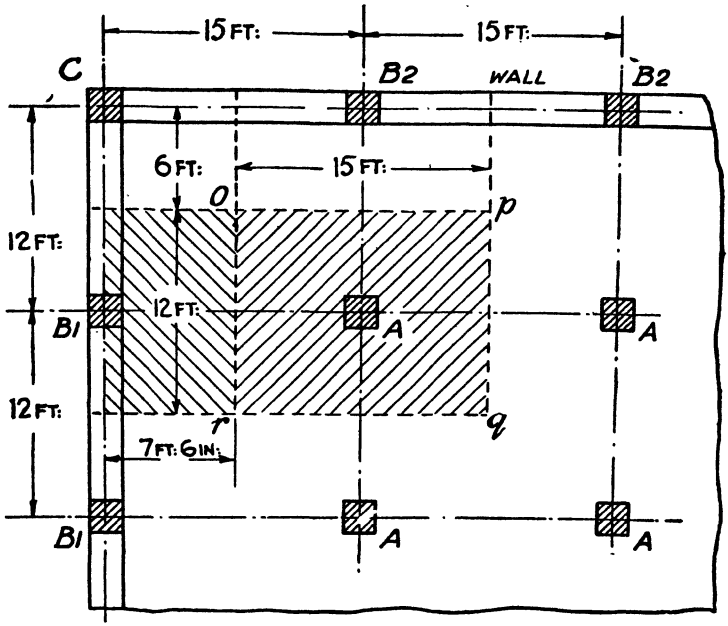


FIG. 8.

The weight of 1 square foot of floor must now be estimated, and this is the sum of the

Deadweight of slab, including any finishes.
" " ceiling below (if any).
" " ribs of beams.*
" " column.*

To this must be added the superimposed or live load on 1 sq. ft. of floor, and an allowance of 5 per cent. for contingencies.

Designating the total distributed load per square foot as $wf$, and the weight of wall between each floor as $wl$ lb. per foot run, then the column loads may be summarised as follows :—

* Instead of reducing these to lb. per square foot, these loads may, of course, be added as a lump item after the distributed loads have been computed.

Col. *A*. $1{\cdot}0\ (15 \times 12 \times wf)$ lb. for each level or lift.
,, *B*1. $0{\cdot}5\ (15 \times 12 \times wf) + 12 \times wl$ lb. for each level or lift.
,, *B*2. $0{\cdot}5\ (15 \times 12 \times wf) + 15 \times wl$ lb. for each level or lift.
,, *C*. $0{\cdot}5\ (15 \times 12 \times wf) + \frac{15 + 12}{2}\ wl$ for each level or lift.

The next factor to be ascertained is the unsupported length ($L$) of any lift, i.e. between any floors. This may be measured from the underside of beams, neglecting haunches, down to the top of the floor, i.e. the top of the beams below. It is essential that at the ends of this measured length the column be braced in both directions, or, in other words, there must be beams running into it in two directions at right angles, as shown on the plan in *Fig.* 8.

Having converted the loads to tons, we can now refer to *Table* 7.

Further notes and qualifications regarding the columns in *Table* 7 are as follows: They have been designed to carry the loads tabulated in column 1 when cast with 1 : 2 : 4 concrete (maximum concrete stress, 600 lb. per sq. in.). Their cross sections, showing the links or binding, are indicated in col. 6.

The sections tabulated are intended for interior or inner supports only, and 1 in. cover of concrete to the main bars has been allowed. For exterior columns (exposed to weather) the cover should be increased to 1½ in. by adding 1 in. to the side of column required. The London County Council requires all columns to have a minimum cover of 1½ in. For end or outside columns (such as those at the sides of a building), the allowable safe load should be taken as only one-half that tabulated in col. 1. Bending stresses due to eccentricity of load or to beams or braces monolithic with the columns have not been considered, but they should be determined and the section emended if necessary. Specialist assistance would be necessary for this purpose.

The links are to be placed at half the tabulated centres given in col. 4 for a distance of one-sixth the height or length $L$ of the column at the upper and lower ends.

The vertical bars must only be lapped at floor or brace levels, and must be given a minimum lap of 24 diameters of the bars concerned. The lap, if longer than $L/6$, must be bound with links at half the tabulated centres. Also, below the lap or splice the lower four or eight bars should be bent inwards just to clear the upper bars at a very small angle to the vertical, i.e. the length of the bent portion should be at least 18 in. for small bars and for small deviations, and increased proportionately for larger bars.

The length $L$ may be taken between the tops and soffits of beams or braces, neglecting the depth of haunches or brackets. It is essential

that the column be adequately fixed in position and direction at the levels between which the length is taken.

From *Table 7* it will be seen that if the load on column *A* were 45 tons and its length 15 ft., the required section would be 14 in. × 14 in., with four $\frac{7}{8}$-in. bars and $\frac{5}{16}$-in. links at 5-in. centres. Had the length been 22 ft., the 15-in. × 15-in. section and equivalent reinforcement would have been necessary.

TABLE 7.

| Max. Load in Tons. | Size of Column Ins. | Reinforcement. Vertical No. of bars and diam. in in. | Reinforcement. Horizontal Diam. and Pitch in in. | Max. Length *L* feet. | Typical Section |
|---|---|---|---|---|---|
| 1 | 2 | 3 | 4 | 5 | 6 |
| 14 | 8×8 | 4—$\frac{5}{8}$ | $\frac{1}{4}$ at 4 *s* | 12 | 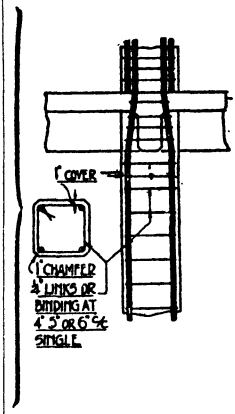  |
| 17 | 9×9 | 4—$\frac{5}{8}$ | $\frac{1}{4}$ at 4 *s* | 13 | |
| 21 | 10×10 | 4—$\frac{5}{8}$ | $\frac{1}{4}$ at 4 *s* | 15 | |
| 28 | 11×11 | 4—$\frac{3}{4}$ | $\frac{1}{4}$ at 4 *s* | 16 | |
| 33 | 12×12 | 4—$\frac{3}{4}$ | $\frac{5}{16}$ at 5 *s* | 18 | |
| 38 | 13×13 | 4—$\frac{3}{4}$ | $\frac{5}{16}$ at 5 *s* | 19 | |
| 47 | 14×14 | 4—$\frac{7}{8}$ | $\frac{5}{16}$ at 5 *s* | 20 | |
| 56 | 15×15 | 4—1 | $\frac{3}{8}$ at 6 *s* | 22 | |
| 64 | 16×16 | 4—1 | $\frac{3}{8}$ at 6 *s* | 24 | |
| 73 | 17×17 | 8—$\frac{3}{4}$ | $\frac{5}{16}$ at 6 *d* | 25 | 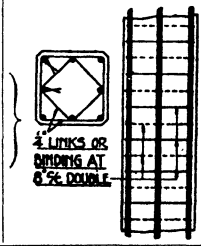  |
| 81 | 18×18 | 8—$\frac{3}{4}$ | $\frac{3}{8}$ at 9 *d* | 27 | |
| 104 | 20×20 | 8—$\frac{7}{8}$ | $\frac{3}{8}$ at 9 *d* | 30 | |

*s* = *single links.* *d* = *double links.*

*Note* :—The London County Council requires $1\frac{1}{2}$ in. minimum cover to column bars, so that the sides of links must be shortened by 1 in. or the column side increased by 1 in.

**Quantities.**—The weight of reinforcement, volume of concrete, and area of shuttering per foot of height of column are given in *Table* 8. It must be remembered that when estimating the steel due allowance must be made for the bars to pass up into the column above by at least 24 diameters,

or for $\frac{5}{8}$ in. bars, say 18 in.
$\frac{3}{4}$ ,, ,, ,, 18 ,,
$\frac{7}{8}$ ,, ,, ,, 24 ,,
1 ,, ,, ,, 24 ,,

TABLE 8.

NET QUANTITIES PER FOOT OF HEIGHT.

| Size of column. | Reinforcement. | | Concrete. | Shuttering. |
|---|---|---|---|---|
| | Vertical or longitudinal bars. | Horizontal bars or links. | | |
| in. | lb. | lb. | cu. ft. | sq. ft. |
| 8 × 8 | 4·2 | 1·35 | 0·45 | 2·7 |
| 9 × 9 | 4·2 | 1·5 | 0·56 | 3·0 |
| 10 × 10 | 4·2 | 1·7 | 0·70 | 3·3 |
| 11 × 11 | 6·0 | 1·9 | 0·84 | 3·7 |
| 12 × 12 | 6·0 | 2·5 | 1·00 | 4·0 |
| 13 × 13 | 6·0 | 2·8 | 1·17 | 4·3 |
| 14 × 14 | 8·2 | 2·9 | 1·36 | 4·7 |
| 15 × 15 | 10·7 | 3·8 | 1·56 | 5·0 |
| 16 × 16 | 10·7 | 4·0 | 1·78 | 5·3 |
| 17 × 17 | 12·0 | 4·1 | 2·00 | 5·7 |
| 18 × 18 | 12·0 | 4·4 | 2·25 | 6·0 |
| 20 × 20 | 16·4 | 4·8 | 2·78 | 6·7 |

**Shuttering.**—Typical shuttering for a column is shown in *Fig.* 9. It consists essentially of two sides, built up of $1\frac{1}{4}$-in. wrought boards on end, of width equal to that of the required column and two sides similarly built but wider by twice the thickness of the boards used. These are securely held in position by 3-in. × 4-in. yokes and $\frac{5}{8}$-in. bolts at intervals of 2 ft. near the top of the column reducing to 1 ft. near the bottom of a 12-ft. column, complete with wedges, as shown in *Fig.* 9, an illustration taken by permission from "Design and Construction of Formwork for Concrete Structures," by A. E. Wynn.

A door must be provided at the bottom so that any shavings, dirt, etc., can be washed out before concreting. The head or top of the mould must be cut to allow for the beams running into the column at the top. Fillets 1 in. by 1 in. should be run down the corners, unless a square corner is desired, as, for instance, on an external face.

It is very desirable to use good and stout timber for column shuttering because it must be rigid under very hard ramming; the slightest

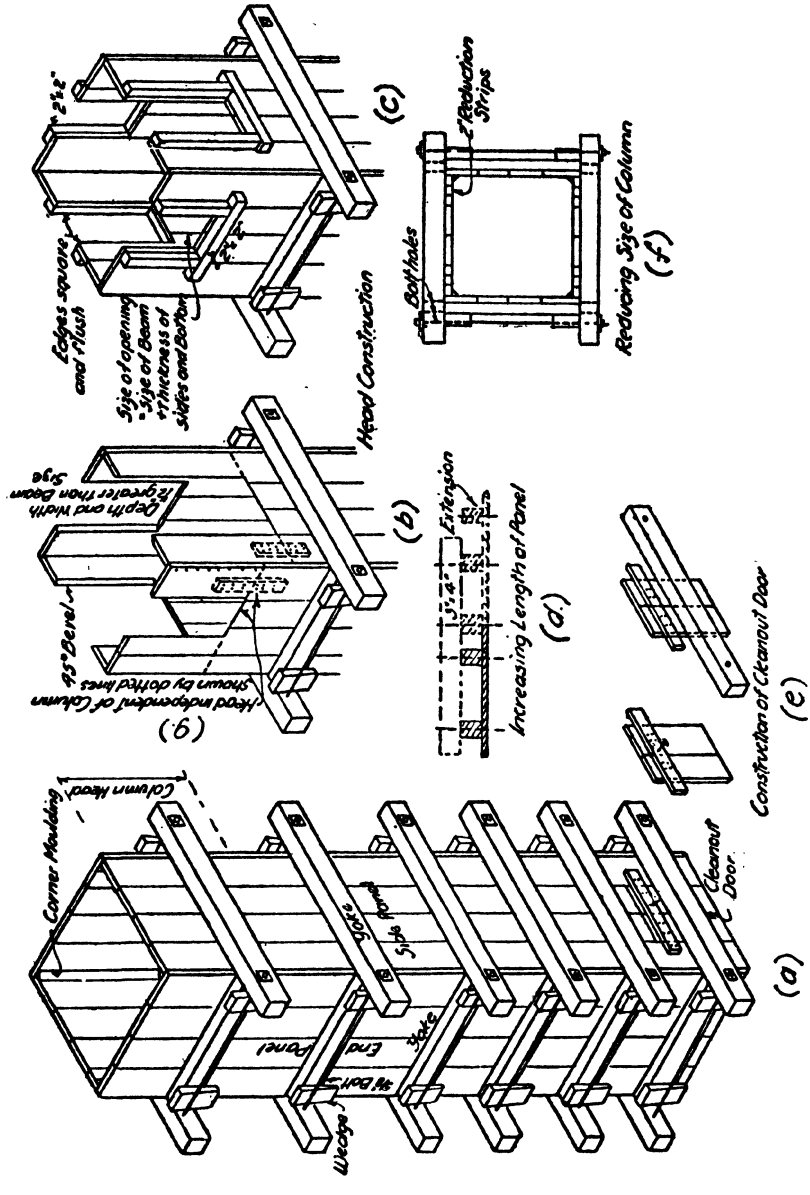
Corner Moulding
Column Head
Yoke
Side Panel
End Panel
Yoke
Wedge
Cleanout Door
(a)
Extension
Increasing Length of Panel
(d)
Construction of Cleanout Door
(e)
Head Construction
(b)
Depth and Width 12 greater than Beam Size
45° Bevel
Head independent of Column shown by dotted lines
(g)
Edges square and flush
Size of opening = Size of Beam + Thickness of sides and Bottom
(c)
Bolt holes
2" Reduction Strips
Reducing Size of Column
(f)

FIG. 9.

bulge or irregularity is very conspicuous in columns. For the same reason the shuttering must be firmly braced laterally to retain its plumb alignment.

Some specifications do not allow the four sides to be erected simultaneously, but require that the fourth shall be carried up in about 12-in. lengths by nailing on or adding short boards as concreting and ramming proceed in 6-in. stages. This, of course, admits of better inspection and control, but complicates the design of the shuttering.

Before assembling the column shuttering the inner faces of the sides should be coated with mould oil so as to give clean surfaces on the concrete.

**Erection of Shuttering—Reinforcement—Concreting.**—If not too high or too heavy, the assembled box can be erected and the reinforcement wired up into a unit and inserted through the top, taking care that the steel cage is situated centrally in the shuttering so that it will have the required cover of concrete on all four sides. It is necessary to have the bottom 2 or 3 ft. of two sides removable between yokes so that the upper reinforcement can be wired to the lower at floor levels. These removable pieces can be avoided, of course, if the reinforcement is erected and wired first, and the box is lowered over it. An easier, and more usual, way is to erect three sides first, then place and fix the reinforcement, and finally put up the fourth side.

Before any concrete is poured a thorough inspection should be made to see that the shuttering is perfectly clean and free from dirt, sawdust, etc., and to see that no shavings, small blocks of wood, etc., are lying about in such a position that they might be swept into the mould. The surface of the previously-set concrete should be coated with thick grout after washing and brushing, and then concrete placed in the mould in about 6-in. layers. Each layer must be thoroughly tamped with a long, narrow, grafting tool or spade, to work the concrete well around the bars and to produce a dense concrete throughout, a very important point in column erection.

The concrete must be stopped just below the soffits of beams or below haunches, and allowed to harden before the top or head is concreted with the beams and slab.

Stripping may be undertaken when 5 days have elapsed after casting with ordinary Portland cement, or in 3 days if rapid-hardening cement is used.

# CHAPTER IV

# BEAMS

## Single or One-Span Beams.

THE beams for which the designs are given are intended for use with the floor and roof slabs described in Chapter VI. It must be understood that the slab actually forms an essential portion of these beams. The rib below the slab is part of the beam and generally carries the tensional reinforcement in the bottom, whereas the slab carries the compressive stresses, which are developed sometimes as far as half-way between the ribs. It is necessary therefore that the slab shall be continuous throughout the length of the beam for half the breadth of the slab (see *Table* 10), equally both sides of the beams, unless special designs are prepared involving much greater percentages and different dispositions of steel. Large openings, or openings in the slab near or against the rib, will therefore require particular consideration, too complex to be dealt with here.

These beams must not be used in situations where one end extends beyond the support, for example, to carry a balcony. A special design is required for beams of this class, the projecting portions of which are known as cantilevers.

**Determination of Dimensions, etc.**—Assuming a floor or roof to carry 112 lb. or 56 lb. per square foot, the necessary single-span beams

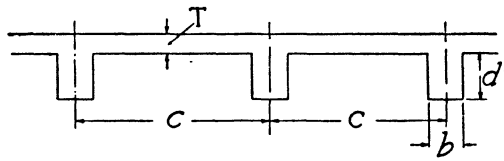


FIG. 10.

spanning, say, from wall to wall, column to wall, or column to column, may be ascertained from the following.

First find the total load per foot run on the beam (*Fig.* 10). This will consist of the live load, the dead weight of the slab, and the dead weight of the rib of the beam. Assuming that the distance between the centres of the beams selected is $C$ (this, of course, is the span of the slab), the load in lb. per foot run of beam then equals:

112 (or 56 for a roof) $\times$ $C$ (in feet), plus thickness of slab in inches $\times$ 12 $\times$ $C$ (in feet), plus depth $d'$ $\times$ breadth $b$ of rib, both in inches.

TABLE 9.

SAFE UNIFORMLY DISTRIBUTED LOAD (INCLUDING Wt. OF SLAB & RIB) IN LBS: PER FOOT RUN OF SINGLE SPAN BEAMS

SPANS IN FEET BETWEEN CENTRES OF BEARINGS.

| BEAM NUMBER | 4 | 6 | 8 | 10 | 12 | 14 | 16 | 18 | 20 | 22 | 24 | BEAM NUMBER |
|---|---|---|---|---|---|---|---|---|---|---|---|---|
| B1 | 1800 | 1200 | 900 | 470 | | | | | | | | B1 |
| B2 | 2000 | 1330 | 1000 | 650 | 450 | | | | | | | B2 |
| B3 | 2500 | 1650 | 1250 | 910 | 630 | | BEAMS ARE TOO SHALLOW FOR | | | | | B3 |
| B4 | 4200 | 2800 | 1600 | 1030 | 710 | 520 | SPANS TO RIGHT OF FIRM | | | | | B4 |
| B5 | 5000 | 3330 | 2160 | 1390 | 960 | 710 | 540 | | LINE | | | B5 |
| B6 | | 3650 | 2750 | 1800 | 1250 | 920 | 700 | 560 | | | | B6 |
| B7 | | 4000 | 3000 | 1970 | 1380 | 1000 | 760 | 610 | 490 | | | B7 |
| B8 | | | 3120 | 2500 | 1760 | 1280 | 980 | 780 | 630 | | | B8 |
| B9 | | | 3250 | 2600 | 2000 | 1480 | 1120 | 890 | 720 | 600 | | B9 |
| B10 | | | | 2700 | 2100 | 1520 | 1170 | 930 | 750 | 620 | 520 | B10 |
| B11 | | | | 2800 | 2350 | 2000 | 1700 | 1330 | 1080 | 890 | 750 | B11 |

Let this total load equal $w$, then from *Table* 9 the number $B_1$, $B_2$, $B_3$, etc., or as the case may be of the standard beams required can be selected for any span between 4 ft. and 24 ft. By further reference to *Table* 10 and *Fig.* 11 the design and full particulars of the selected beam can be ascertained; it should be confirmed that the depth of the slab previously chosen is at least the same or greater than that specified under (S), *Table* 10, the minimum slab depth for the beam selected. Finally the quantities can be prepared by reference to *Table* 11.

*Example.*—Suppose it is desired to support a floor to carry 112 lb. per sq. ft. live load on beams at 5-ft. intervals. Referring to *Table* 14 for continuous slabs, in Chapter VI, it is found that a 4-in. slab is required. Then $C = 5$ ft. and $T = 4$ in. Next compute the load $w$ per foot run on the beam as follows:

| | | lb. |
|---|---|---|
| On account of live load ($112 \times C$) . . | $= 112 \times 5 =$ | 560 |
| ,, ,, slab load ($T \times 12 \times C$) . | $= 48 \times 5 =$ | 240 |
| ,, ,, rib of beam $d' \times b$ say . | $= 12 \times 6 =$ | 72 |
| | Total | 872 |

Assuming the span of the beam is to be 11 ft., by reference to *Table* 9 and reading under the 12-ft. span column (which will include 11 ft.) it is found that Standard Beam B5 is required (this will carry up to 960 lb. per foot run).

By reference to *Table* 10 the following details are found for Beam No. B5: Depth of beam, 12 in.; width, 6 in.; top steel, two $\frac{3}{8}$-in. bars; bottom steel, two $\frac{3}{4}$-in. and two $\frac{5}{8}$-in. bars. Note that the minimum slab thickness required by this beam is 4 in., which is the depth chosen above and therefore covers the case. Also the weight of the rib is only 48 lb. against the assumption of 72 lb., and is therefore on the safe side. The minimum breadth of slab is 24 in., while that provided is actually 5 ft. = 60 in.

Examining these tables more fully it will be noticed that the span of the beam (S) is measured between the centres of the bearings. The depth (D) is the overall depth in inches, that is, from the top of the slab to the underside of the rib. The breadth of the rib is ($b$) and the least width of slab is B. Any of these sizes, including the depth of the slab, may be increased as desired above the minimum values given in *Table* 10.

A typical section, elevation, and plan of the beams are given in *Fig.* 11. The top layer of bottom bars is to be cranked, as shown, at 45 degrees at both ends. The pitch of the stirrup given in *Table* 10 is the minimum pitch for the stirrups between the end of the beam and the lower

TABLE 10.

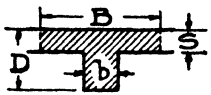


## DESCRIPTION OF BEAMS

MAX: STRESS IN CONCRETE C = 600 lbs. SQ. IN.
STEEL t = 16,000 " "
m = 15

| BEAM NUMBER | OVERALL DEPTH IN INCHES D | MINIMUM BREADTH OF RIB IN INCHES b | MINIMUM THICKNESS OF SLAB IN INCHES S | MINIMUM BREADTH OF SLAB IN INCHES B | TOP STEEL | BOTTOM STEEL | | STIRRUPS DIA: OF BAR & PITCH IN INCHES | WT OF RIB PER FOOT RUN IN LBS | BEAM NUMBER |
|---|---|---|---|---|---|---|---|---|---|---|
| | | | | | | BOTTOM LAYER | TOP LAYER | | | |
| B 1 | 8 | 5 | 3 | 18 | 2 - 3/8 | 2 - 1/2 | 2 - 1/2 | 1/4 @ 3 | 25 | B 1 |
| B 2 | 9 | 5 | 3 | 21 | 2 - 3/8 | 2 - 5/8 | 2 - 1/2 | 1/4 @ 3 | 30 | B 2 |
| B 3 | 10 | 6 | 3 1/2 | 24 | 2 - 3/8 | 2 - 5/8 | 2 - 5/8 | 1/4 @ 3 | 39 | B 3 |
| B 4 | 11 | 6 | 4 | 24 | 2 - 3/8 | 2 - 5/8 | 2 5/8 | 5/16 @ 3 | 42 | B 4 |
| B 5 | 12 | 6 | 4 | 24 | 2 - 3/8 | 2 - 3/4 | 2 - 5/8 | 5/16 @ 3 | 48 | B 5 |
| B 6 | 13 | 6 | 4 | 24 | 2 - 1/2 | 2 - 3/4 | 2 - 3/4 | 5/16 @ 3 | 54 | B 6 |
| B 7 | 14 | 6 | 4 1/2 | 24 | 2 - 1/2 | 2 - 3/4 | 2 - 3/4 | 5/16 @ 3 | 57 | B 7 |
| B 8 | 15 | 6 | 5 | 27 | 2 - 1/2 | 2 - 7/8 | 2 - 3/4 | 5/16 @ 3 | 60 | B 8 |
| B 9 | 16 | 7 | 5 1/2 | 30 | 2 - 1/2 | 3 - 3/4 | 2 - 3/4 | 5/16 @ 3 | 74 | B 9 |
| B 10 | 17 | 7 | 5 1/2 | 30 | 2 - 5/8 | 3 - 3/4 | 2 - 3/4 | 5/16 @ 3 | 80 | B 10 |
| B 11 | 18 | 8 | 6 | 30 | 2 - 5/8 | 3 - 7/8 | 2 - 7/8 | 5/16 @ 3 | 96 | B 11 |

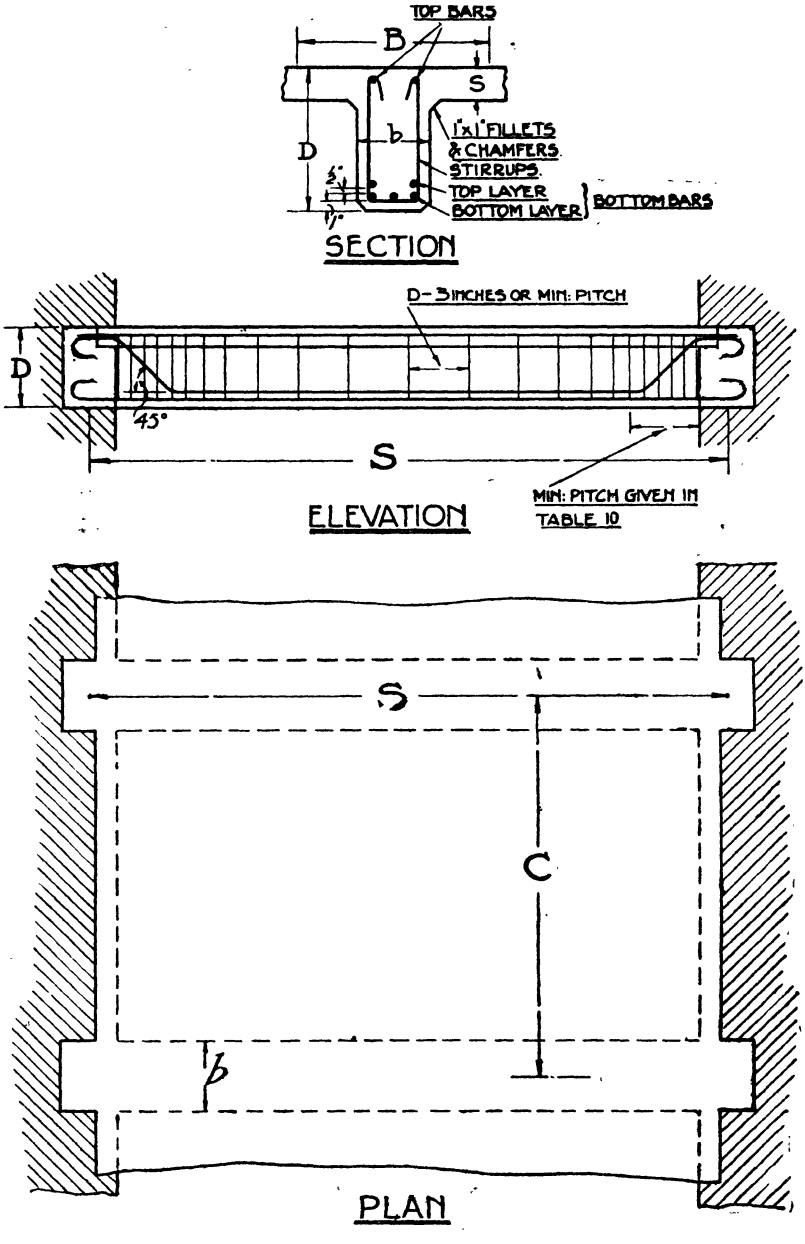
TOP BARS
B
S
b
D
1"x1" FILLETS
& CHAMFERS.
STIRRUPS.
TOP LAYER
BOTTOM LAYER
BOTTOM BARS
SECTION
D-3 INCHES OR MIN: PITCH
D
45°
S
MIN: PITCH GIVEN IN
TABLE 10
ELEVATION
S
C
b
PLAN

FIG. 11.

point of the crank. Inwards from here the spacing may be gradually and uniformly increased to 3 in. less than the total depth of the beam at the middle of the beams. The main slab bars will pass over the top bars of the beam, which will touch them and be wired to them at their crossings.

**Wall Bearings.**—Suitable pads or bearings must be provided to the ends of beams resting on walls so that the allowable pressure of 5 tons per square foot for brick walls in cement mortar and 3 tons per square foot for brick walls in lime mortar is not exceeded. The beam should run into the wall a distance (M) as under:

| | | | | |
|---|---|---|---|---|
| At least | 9 | in. for spans up to | 12 | ft. |
| ,, | 13½ | ,, ,, ,, | 18 | ,, |
| ,, | 18 | ,, ,, ,, | 24 | ,, |

The simplest type of pad is shown in *Fig.* 12 and is cast monolithic

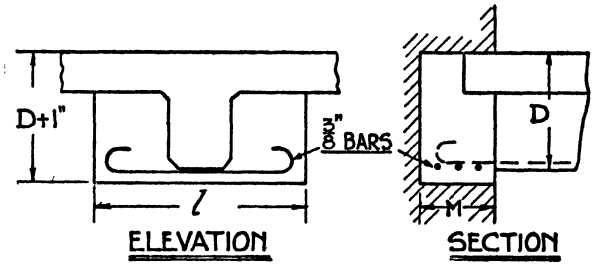


FIG. 12.—PADS TO BEAMS.

with the beam. Its depth is 1 in. greater than that of the beam, and it must be made as long as required so that the above-mentioned bearing pressures are nowhere exceeded; indeed it is good practice to err on the large side when calculating bearing areas. The length generally works out to between 1 and 3 ft. and the pads must be reinforced longitudinally by one ⅜-in. bar per 4 in. (or part of 4 in.) of width. Thus a 10-ft. span beam would have a 9-in. bearing with three ⅜-in. bars. These bars are placed below the bottom bars of the beam and wired across them, and must be hooked at their ends.

**Notes on Construction.**—It is important that 1-in. by 1-in. fillets be provided between the rib and the underside of the slab, and it is usually desirable to chamfer the arrises to the soffit for ease of stripping the shuttering and preserving the corners.

The reinforcement may be assembled into a frame before putting it into the mould, but in any case the bars and stirrups and also slab bars must be accurately placed and securely wired before any concreting

is undertaken. The external cover of concrete to the main bars is to be 1 in. and the vertical clearance between the two lower layers ½ in. Small pre-cast blocks of cement mortar 1 in. high may be used as stools to obtain the outer cover of concrete. The space required between the top and bottom layers of bottom bars may be maintained by short pieces of ½-in. bars laid transversely and left in the work.

When concreting, the rib should be filled first in 6-in. layers well rammed and rodded and the slab poured immediately afterwards. If for any reason the slab cannot be put on at the same pouring, then it must follow as soon as possible, but any loose material must first be brushed from the top of the rib concrete and the latter washed over with neat cement grout. Also the day's work must be carefully planned so that the whole floor is cast at one pouring, or so that the joints left at the end of any shift occur at the centre of the span both for beams and slabs. In no case must joints occur near supports or concentrated loads. The joints must be vertical, and a board, cut to allow bars to pass, fixed temporarily in the moulds against which the concrete can be rammed. As before, this joint must be cleaned and well covered with cement grout when work is restarted.

**Length of Bars.**—The total length of a beam is the span plus the width of one bearing. The following bars per beam are required:

*In Bottom.*—Two (or three) bars (*Fig.* 13, A) the length of each, measured over the hooks, being 2 in. less than the total length of the beam. The total length of bar cannot be given as the extra length required for the standard hooks varies with the diameter of the bar employed. These standard hooks and the necessary extra lengths are tabulated in the General Specification (Chapter I).

Also two bars (*Fig.* 13, B): the distance (*c*) between the centre lines of the upper and lower straight portions is equal to the total depth of the beam less twice the diameter of the bar less 2½ in. The length of the middle straight portion is equal to the clear span less twice the distance (*c*) between the centre lines of the upper and lower straight portions.

The length, measured over the hooks, is 2 in. less than the sum of the length of the straight central portion plus 2·8 times the distance from centre to centre of the upper and lower straight portions plus twice the width of one bearing.

*In Top.*—Two bars each of a length equal to the span plus 2 in.

*Stirrups.*—Number as required. The total length of each stirrup (*Fig.* 13, C) is twice the total depth of the beam plus the width of the rib plus 2 in.

**Shuttering.**—The moulds for the beams are usually made in conjunction with those for the slab. The whole must be true to line and sufficiently braced and strutted to be rigid, and free from appreciable

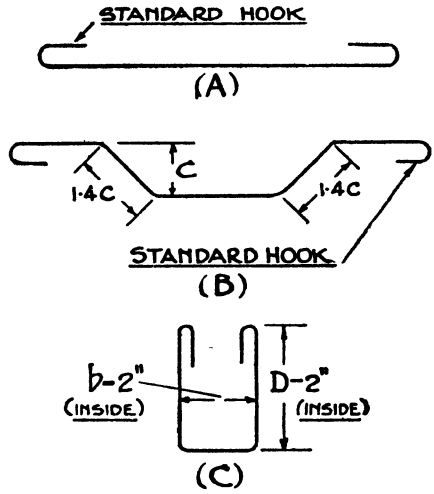


FIG. 13.

deflection when carrying the dead load of the wet concrete which is to be placed upon it; it must also be free from vibration when men and barrows pass over.

The soffits of the beams must be strutted by vertical supports resting on folding-wedges upon a sole-plate sufficiently large to avoid settlement during construction. When striking, these wedges are knocked out slowly so that the support is gently lowered.

The sides of the beams and the soffit of the slabs may be removed before the beam soffits, but in doing so great care must be taken that the beam soffit is not disturbed. For further essential information refer to the General Specification (Chapter I).

A typical arrangement for beam boxes is shown in *Fig.* 14, where the wedges support 4-in. by 4-in. posts provided with a cross-head formed of the same size timber and stiffened with 1-in. by 4-in. braces. These cross-heads in turn support 2-in. planks forming the beam soffits. The beam sides are built up of 1-in. to 1½-in. plank stiffened with battens at 24-in. centres. A 1-in. by 4-in. ledger nailed to these battens carries 2-in. by 6-in. joists which support 1-in. boards for the slab.

Before concreting, the shuttering must be thoroughly examined, particularly the props and wedges; all dirt, shavings, etc., must be cleared away, existing concrete joints cleaned, and inner surfaces of the shuttering treated as described in the General Specification (Chapter I).

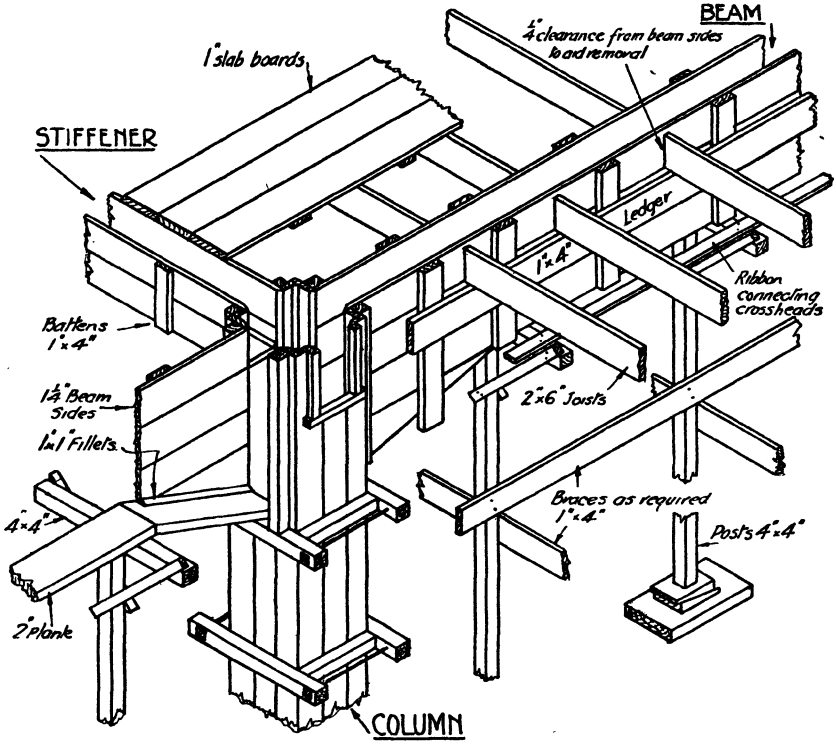


FIG. 14.—TYPICAL DETAIL OF SHUTTERING.

**Striking of Shuttering.**—As mentioned in the General Specification (Chapter I) the period for which the shuttering must remain in position undisturbed varies with the weather and the class of cement used. In any case, using ordinary Portland cement the soffits of beams should be left in position for 21 days; if it is intended to strut an upper floor using the one below as a support, the props must be carefully replaced under the soffit when the boards are removed and the new props to support the upper floor should occur over the replaced props below.

**Materials.**—It will be observed from *Table* 10 that the stresses adopted in the design are 600 lb. per square inch in the concrete and 16,000 lb. per square inch in the steel, both of which stresses call for first-class materials. The concrete mix is 1 part cement, 2 parts sand, and 4 parts aggregate.

TABLE 11.

QUANTITIES PER FOOT RUN OF BEAM.

| Beam number. | Concrete in rib (full depth taken) in cubic ft. | Steel. Approximate average weight in lb. (stirrups included). |
|---|---|---|
| B 1 | 0·28 | 5·0 |
| B 2 | 0·31 | 6·0 |
| B 3 | 0·42 | 7·0 |
| B 4 | 0·46 | 8·0 |
| B 5 | 0·50 | 9·2 |
| B 6 | 0·54 | 11·0 |
| B 7 | 0·58 | 11·2 |
| B 8 | 0·63 | 12·5 |
| B 9 | 0·78 | 13·5 |
| B 10 | 0·83 | 14·5 |
| B 11 | 1·00 | 17·5 |

*Notes.*—The concrete to be added to complete the floor will be the volume of the slab between the ribs. It is impossible to give definite figures for the weight of steel per foot run because this will vary with every different span of the same size beam. The figures given above are therefore averages and will usually cover ordinary cases. To obtain exact figures, draw out the beam, measure off the bars and stirrups, and multiply by the weights of bar per foot run (see table on page 10).

## Continuous Beams.

When beams run over two or more spans and are continuous at their ends (i.e. over their support) the internal bending stresses, produced by bending moments which are dependent on the loads, spans, and other factors, are much modified from those obtaining in simple or one-span beams. For instance, in the latter case there is no bending moment at the ends of beams, but in continuous beams the end moment may be double that at the centre of the beam. This is why additional steel and also a haunch are usually provided at the supports or bearings.

On the other hand, when there is monolithic connection between two or more continuous beams the size of the beam and the amount of steel required at its centre may be reduced. For ordinary distributed light loads as have been considered previously, viz. 112 and 56 lb per square foot, the following rules may be applied, provided that adjacent beams have approximately the same spans.

(1) The particulars of the slab remain as before.

(2) Evaluate the total load per foot run on the beam as before, but before reading off the beam required from *Table* 9 reduce this total load by one-quarter. Thus if the actual total load per foot is 2000 lb., a simple or one-span beam spanning 12 ft. would require Section B9. For a continuous beam, however, the equivalent load is $2000 \times \frac{3}{4} =$

1500 lb. per foot run. Reference to *Table* 9 shows that Section B8 may be employed as specified in *Table* 10.

(3) The width of the rib of the beam should be made 1 in. greater to allow the haunch bars described below to pass freely between the horizontal reinforcement.

(4) A haunch or splay must be added to the beam ends that are continuous, as shown in *Fig.* 15. The length of the haunch ($h$) should equal one-quarter of the span ($s$) and is measured from the centre of the column. The extra depth ($e$) is to be one-half of the overall depth of beam (D).

(5) The ordinary reinforcement to the beam, viz. bars, $a$, $b$ and $c$, as found from *Table* 10, should be 2 or 3 in. shorter than the span, so that they do not foul those from the adjacent beam at the supports.

It should be noted that bars $b$ are cranked up at an angle of 30 degrees at the internal supports instead of 45 degrees as at the external support. The inclined length of this 30-degree crank is twice the amount of vertical crank in the bars. Bars $a$ and $b$ may be gently bent inwards (but not kinked) near the supports to allow bars $f$ to pass them on the outside.

It is now necessary to add bars $d$ and $f$, equally disposed on each side of the centre line of the support. Each set of bars $d$ and $f$ will equal in area the combined areas of bars $a$ and $b$, thus

row $d_t$ and row $f_b$ will each = row $a$ in number and diameter.

row $d_b$ and row $f_t$ will each = row $b$ in number and diameter.

The lengths of each row are indicated in *Fig.* 15, and it will be noticed that bars $d$ have to be provided with hooks at their extremities.

(6) The centres and arrangement of the stirrups will remain as indicated in *Table* 10, but at the haunches they must be deepened so as to pass under bars $f$ and over bars $d$.

(7) The support may consist of a reinforced concrete column, brick wall, etc. When columns provide the support the column bars must pass well up into the slab. Also, as the column heads will be held only in the direction of the continuous beams entering, it is very desirable to connect the heads in the other direction by a beam at right angles to the continuous beam. This beam, or stiffener, should be in depth about one-and-a-half times the length of the side of the column and 5 or 6 in. wide. For small slab spans under 6 ft., two $\frac{5}{8}$-in. bars should be placed both in the top and in the bottom of the beam or stiffener. For slab spans over 6 ft., two $\frac{3}{4}$-in. bars should be used. The top bars must run 18 in. past the centre line of the columns; they must be in one piece and hooked at both ends. The bottom bars may lap 12 or 18 in. at the column. Stirrups, $\frac{1}{4}$-in. diameter, must be provided at a maximum distance apart of half the depth of the stiffener.

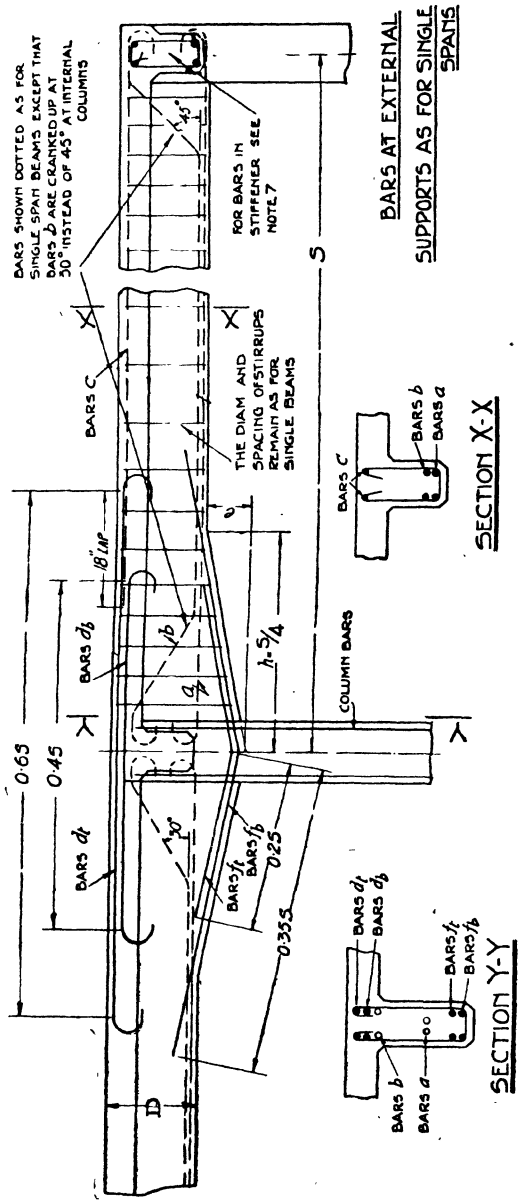


FIG. 15.—DETAIL OF CONTINUOUS BEAM AT INTERNAL SUPPORTS.

(8) When adjacent spans are not of the same length the dimensions should be determined for the greatest span and the same section run through all spans. This also applies to the haunches, which should be worked out for the greatest spans; the straight centre portion of the shorter beams will therefore be less than half the length of the beam.

As there are so many variable quantities it is obviously impossible to tabulate a list of quantities. The best way to determine these is to draw out the beams to scale and measure off the lengths. This may be done approximately for estimating, but for actual construction all such details should be drawn out accurately to determine precise lengths and to show the arrangement of the bars.

Shuttering for continuous beams and stiffeners is illustrated in *Fig.* 14.

## Wall and External Beams.

So far in connection with beams only those with slabs on both sides of the ribs have been considered. In the case of external beams, wall beams, or beams framing an opening, the slab is absent on one side of the rib, so that a serious modification to the design must be made. By wall beams we refer to those external beams which, in addition to the slab load, also carry the weight of the wall between the columns or piers. Where wall loads only are carried over small openings between floor levels, lintels as described in Chapter V may be used.

A typical section through a wall beam or external beam is shown in *Fig.* 16. To determine the dimensions the total load must be com-

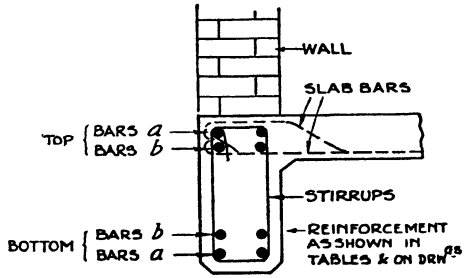


FIG. 16—SECTION THROUGH CENTRE OF WALL BEAM OR EXTERNAL BEAM.

puted and reference made to *Tables* 9 and 10 and *Figs.* 11 and 15 as before.

Whether a single-span or continuous-span beam, the load $w$ per foot run will consist of:

| | | lb. |
|---|---|---|
| The weight of the rib per foot run: = total depth of beam in inches multiplied by breadth of rib in inches (see p. 10) | = | |
| The weight of the slab: = thickness of slab in inches multiplied by half its span in feet multiplied by 12 | = | |
| The weight of the live load on the slab: = 112 (or 56) multiplied by half the span of the slab in feet | = | |
| The weight of the wall above the beam: = the height of the wall in feet multiplied by its thickness in feet multiplied by 144 (for a concrete wall) or by 112 (for a brick wall) | = | |
| Total | | |

**Single-Span Beams.**—Having found $w$, the load per foot run of beam, increase this load by 50 per cent. (i.e. multiply by $1\frac{1}{2}$) and from *Table* 9, using this increased load and the span desired, read off the beam number required. Thus if $w$ works out to 600 lb., increasing by 50 per cent. makes 900 lb. If the span is 18 ft., then beam No. B10 will be required. The section, however, particularly the reinforcement, is increased from that given in *Table* 10 and is described below.

**Continuous-Span Beams.**—Having found $w$ as above, before reading off the beam number from *Table* 9 increase $w$ by $12\frac{1}{2}$ per cent. (i.e. multiply by $1\frac{1}{8}$). Thus for a continuous beam of $w = 600$ lb. the increased figure equals 675, which over a span of 18 ft. calls for beam No. B8 modified as below.

### Modification to Sections of Beams.

The modifications to the sections given in *Table* 10 and *Figs.* 11 and 15, to enable them to be employed with the slab running into the rib on one side only, consist in the following additions to the details described and shown in the above-mentioned table and figures.

(1) It is good practice to make the beam as wide as the wall it carries, so that wall beams will usually be 9 in., 11 in., etc., thick; that is, an increase from the $b$ shown in *Table* 10.

(2) The reinforcement in the top of the beam must be increased from two $\frac{3}{8}$-in. or two $\frac{1}{2}$-in. or two $\frac{5}{8}$-in. bars to equal those in the bottom of the beam. Thus, taking Section B8 (*Table* 10), the two $\frac{1}{2}$-in. bars in the top of an internal beam will be replaced by two $\frac{7}{8}$-in. and two $\frac{3}{4}$-in. bars in the top (the $\frac{7}{8}$-in. bars, or bottom layer of bottom bars, becoming

the upper layer of the top bars), and the section will accordingly be as *Figs.* 16 and 17.

The length of the top bars will be the same as shown in *Figs.* 11 and 15. It will be noticed that the stirrups are taken round the top bars to form a complete loop, otherwise the reinforcement remains as shown in the tables or the drawings. Continuous beams will, of course, be provided with the haunches and reinforcement previously described, but no further modification is necessary except that the thickness of the beam (9 in. or 11 in., etc.) will be carried through the haunch.

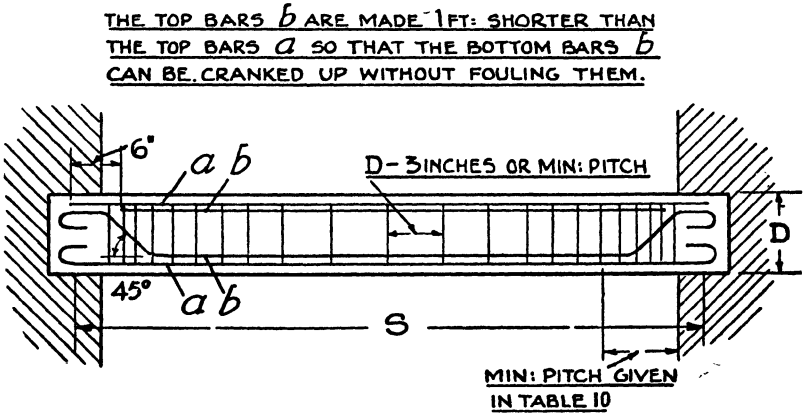


FIG. 17.

## CHAPTER V

# LINTELS

THE lintels given in *Table* 12 have been designed for use in brick buildings, such as houses, hospitals, factories, etc., and for spanning over small openings in their walls.

Only the weight of the wall above the lintel has been taken into consideration, so that floor loads or concentrated loads from beams or joists running into the wall over the lintel are not considered here. The latter conditions would require special treatment dependent on the circumstances of each individual case.

Again, the lintels in the lower stories of tall brick or stone buildings may require special investigation if the walls are heavily loaded, particularly if locally heavily loaded owing to the presence of numerous openings in the walls. Generally speaking, however, the lintels described will serve for the usual cases where the height of wall above the lintel is about equal to or more than the clear span.

The weight of wall used in the calculations is that of the equilateral triangle of side equal to the clear span.

From *Table* 12 and *Fig.* 18 it will be noted that complete details for estimating and construction are given for clear spans ($S$) of from 3 to 9 ft. for walls $4\frac{1}{2}$ in. and 9 in. thick. Eleven-inch hollow walls may be taken as 9 in. For greater thicknesses of wall add units of $4\frac{1}{2}$ in. and 9 in. together (concrete and steel) until the lintel is as thick as the wall.

The concrete must be 1 : 2 : 4 mix, and the reinforcement mild steel bars to B.S.S. or equal. It is also assumed that the brickwork under the bearings is capable of carrying safely 5 tons per square foot.

When cast *in situ* the soffit should not be struck until 14 days have elapsed assuming normal conditions and the use of ordinary Portland cement. They must not be loaded, of course, until 4 or 6 weeks after casting. If cast before hoisting into position a similar or longer period should elapse, and it is important to mark the top plainly with the word "TOP," to ensure that it is not hoisted or laid upside down and worthless from the point of view of strength. If rapid-hardening Portland cement is used these periods may be reduced as follows: Striking soffit of *in situ* lintels, 4 days; loading *in situ* lintels, 7 days; stripping pre-cast lintels, 2 days; hoisting pre-cast lintels, 8 days.

It is desirable in lintels of more than 5 ft. span to place two $\frac{3}{8}$-in. bars in the top around which the $\frac{1}{4}$-in. binding at 12-in. centres can be taken. In the best practice steel is always inserted in the top together with bind-

TABLE 12.

This table is for 1 : 2 : 4 concrete and mild steel bars to B.S.S. One-inch cover of concrete to steel. Maximum compression 600 lb. per square inch. Maximum tension, 16,000 lb. per square inch.

| Clear Span not exceeding. | Minimum Bearing. | Overall Depth of Lintel. | Thickness of Wall carried and of lintel. | Reinforcement. No. and Diam. in inches. | | Quantities per ft. run excluding top bars and binding. | |
|---|---|---|---|---|---|---|---|
| | | | | Hooked only. | Hooked and Cranked. | Concrete cu. ft. | Steel lbs. |
| feet. | in. | in. | in. | | | | |
| *S* | *B* | *d* | *t* | | | | |
| 3 | $4\frac{1}{2}$ | $4\frac{1}{2}$ | $4\frac{1}{2}$ | $2-\frac{3}{8}$ | $1-\frac{3}{8}$ | 0·14 | 1·45 |
| | | | 9 | $2-\frac{3}{8}$ | $1-\frac{3}{8}$ | 0·28 | |
| 4 | 6 | $4\frac{1}{2}$ | $4\frac{1}{2}$ | $2-\frac{3}{8}$ | $1-\frac{3}{8}$ | 0·14 | 1·4 |
| | | | 9 | $2-\frac{3}{8}$ | $1-\frac{3}{8}$ | 0·28 | |
| 5 | 6 | 5 | $4\frac{1}{2}$ | $2-\frac{3}{8}$ | $1-\frac{3}{8}$ | 0·16 | 1·35 |
| | | | 9 | $2-\frac{3}{8}$ | $1-\frac{3}{8}$ | 0·32 | |
| 6 | 9 | 6 | $4\frac{1}{2}$ | $2-\frac{3}{8}$ | $1-\frac{3}{8}$ | 0·19 | 1·3 |
| | | | 9 | $2-\frac{3}{8}$ | $2-\frac{3}{8}$ | 0·38 | 1·75 |
| 7 | 9 | 7 | $4\frac{1}{2}$ | $2-\frac{3}{8}$ | $1-\frac{3}{8}$ | 0·22 | 1·3 |
| | | | 9 | $2-\frac{3}{8}$ | $2-\frac{3}{8}$ | 0·44 | 1·7 |
| 8 | 9 | 8 | $4\frac{1}{2}$ | $2-\frac{3}{8}$ | $1-\frac{3}{8}$ | 0·25 | 1·25 |
| | | | 9 | $2-\frac{3}{8}$ | $2-\frac{3}{8}$ | 0·50 | 1·7 |
| 9 | 12 | 9 | $4\frac{1}{2}$ | $2-\frac{3}{8}$ | $1-\frac{3}{8}$ | 0·28 | 1·25 |
| | | | 9 | $2-\frac{7}{16}$ | $2-\frac{7}{16}$ | 0·56 | 2·25 |

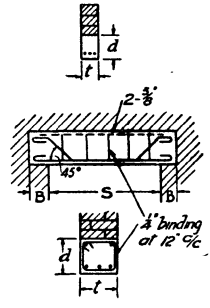


FIG. 18.

ing, even for the smaller spans, as this assists, amongst other things, to support the lower bars during concreting.

The cover of concrete to bars is to be 1 in. The outermost length of the bars will be the length of the clear span plus the bearing at each end less 2 in.; and they must be provided with standard hooks, 5 in. round the bend in this case. The cranked bars are to be bent down at 45 deg. from a point just over the edge of the support or opening. Binding, as already mentioned, is always desirable, and must be used for spans over 6 ft.

The actual length of bottom bars required will therefore be approximately the length of the clear span plus the width of the two bearings plus 6 in. The cranked bars will require a further addition of about three-quarters of the depth of the lintel to allow for the cranked-up portion.

It may be pointed out that the depths for the various spans enumerated in the table are the minima; but they need not be thus restricted, so that lintels of spans from 3 ft. to 8 ft. in any particular building may all be made 9 in. deep if required. The reinforcement indicated should, however, be inserted despite increase of depth.

In the case of the $4\frac{1}{2}$-in. wide lintel, the cranked bar should be cranked

an amount 3 in. less than the depth of the lintel, so that its lower portion lies above the two bottom bars, leaving more space between the rods when concreting. In all other cases the overall amount of cranked depth is to be 2 in. less than the total depth of the lintel.

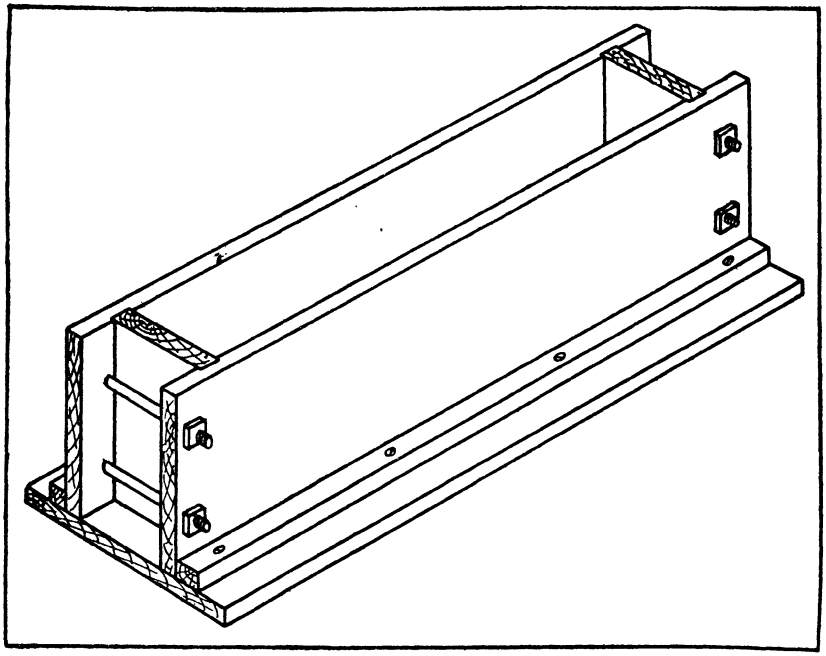

FIG. 19.

## Moulds.

Pre-cast lintels may be cast on the ground in a suitable mould, such as that shown in *Fig.* 19. The wood should not be less than 1½ in. thick. If more than one board is necessary to make the base of the desired width they should be firmly held together by battens screwed on from the underside: in any case it is desirable to raise the mould on battens in order to keep the base from contact with the ground. Ledges are screwed to the base, as shown, a distance apart according to the width of the lintel plus the thickness of the two sides. The ends are grooved into the sides, so that when the bolts are tightened a rigid mould is formed. In the case of lintels over 5 ft. long there is a danger of the mould bulging in the centre; this can be avoided by the use of cramps across the top at the centre of a long mould, or strips of wood placed across the

mould and nailed to the sides would be satisfactory, the nails being partly driven only to facilitate removal.

To strip the mould, remove the ledges and bolts, and take away the sides, followed by the ends.

If a large number of lintels are required, a gang mould may be made on the same principle, with wood dividers between each lintel and long bolts threaded through the sides and dividers.

Lintels cast *in situ* follow the same lines as beams cast *in situ*, where provision is usually made for removing the sides first without in any way disturbing the soffit, which must be retained in position and firmly propped for the full maturing period.

Before concreting any lintel the steel should be accurately placed and held in position so that the concrete can be well rammed under and around the bars.

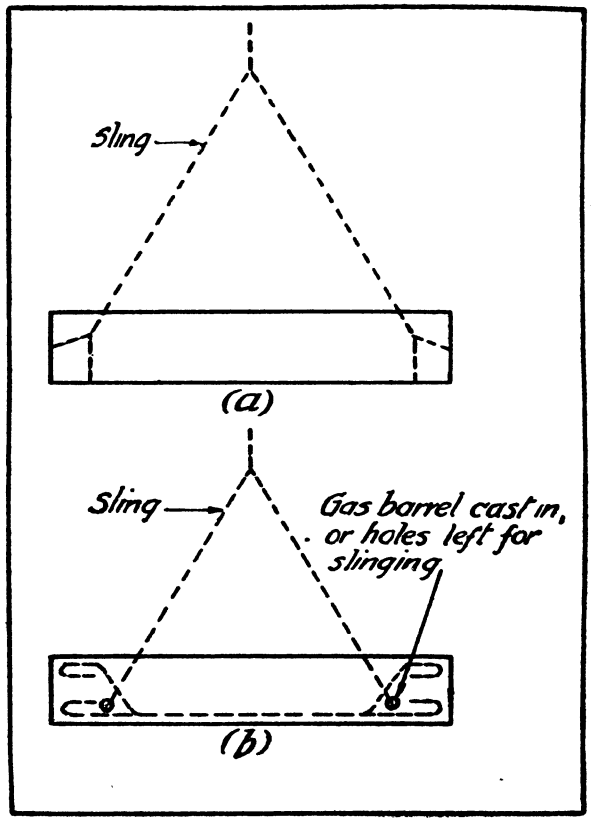


FIG. 20.

## Lifting.

When lifting pre-cast lintels care must be taken that they are lifted with the sides vertical and that they are supported at or near each end, unless, of course, they are lifted on a cradle with a timber or stiff floor. If small holes or short lengths of gas barrel are left in large and heavy lintels they should be formed an inch above the bottom bars, but under the slope of the cranked-up bar (see *Fig.* 20). They must not be lifted at their centres, and any lifting or moving of the lintels whatsoever must be gentle and gradual, avoiding sudden hoisting and shock. Neither should they be moved along the ground on rollers in such a way that the whole weight may at any time come on one roller near the centre of the lintel.

## CHAPTER VI

# FLOOR AND ROOF SLABS

### Loading and Supporting Slabs.

THE following particulars relate to floor or roof slabs capable of carrying a superload of 1 cwt. per square foot exclusive of the dead load of the slab itself, and distributed if required over the whole area of the slab. This superload is suitable for most ordinary purposes such as for domestic buildings, offices, factories, etc., housing no heavy machinery; but it would not suffice for ballrooms, drill halls, book stores, warehouse floors carrying heavy merchandise, or for a floor subject to severe vibration or impact. Such floors as these must be designed specially for loads from twice to ten times the amount stated.

In addition to the superload it is often required that walls or partitions be built above the slab to form rooms and compartments, and care must be taken that these are supported immediately beneath the slab by walls of equal or greater thickness, by joists, beams, or other adequate support. While it is possible for slabs of small span to carry light breeze concrete plastered partitions, it must not be forgotten that these weigh about 180 lb. per foot run when 8 ft. high, which requires that the floor should not be fully loaded to 1 cwt. per square foot close to the wall.

It will be appreciated therefore that a 4½-in. wall, plastered both sides, which brings over 400 lb. per foot run of wall on to the slab, cannot be built indiscriminately on slabs unless both these and their supports have been designed to take them. Where 4½-in. or thicker walls are necessary these must be built over the slab supports; or if not, special beams must be inserted underneath.

It is not good practice to support floor slabs on 4½-in. brick walls, particularly walls in lime mortar, unless they are of very small span; a 9-in. wall should be considered the minimum. Where a slab passes over a 4½-in. partition a space of ½ in. should be left between the underside of the slab and the top of the wall; this space may be plastered up after the slab has been struck. If this is not done there will be danger of a crack forming on the upper surface of the floor following the line of the partition below.

Apart from walls, slabs may be carried on concrete beams with which they are incorporated or on rolled steel joists. The former will be dealt with later, but with regard to the latter there are two alternative methods:

(1) with the slab passing over the top flange;

(2) with the top flange of the rolled steel joists raised to within 2 in. of the upper surface of the slab.

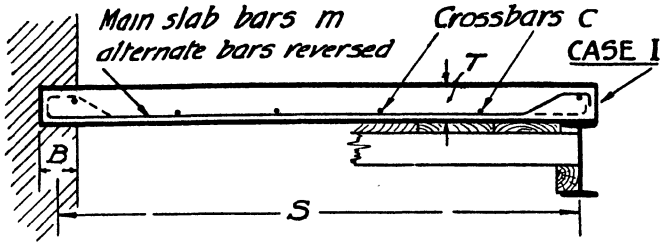


FIG. 21.—SINGLE SPANS.

*Case* (1) makes the simpler job if there is no objection to the naked joist showing beneath, as illustrated on the right-hand side of *Fig.* 21. In continuous slabs the reinforcement, in this case, can pass freely over the joist.

*Case* (2) allows a few inches of headroom to be saved but requires haunching or the encasing of the joist in concrete. This is shown in *Fig.* 22, and if the casing is to envelop the joist completely a light mesh should be placed in the concrete around the lower flange. This method enables the cranked bars in the top of the slab to pass over the upper flange to gain the necessary continuity to transmit the tensional stresses, but necessitates the shortening of the lower bars, the ends of which must abut against the web of the joist. The shuttering is more complicated and care should be exercised to see that the haunching is rammed solid, particularly under the upper flange, to transmit the compression through the web.

## Centering.

It is essential that the boarding should be rigid and amply strong to carry the wet concrete and any incidental load likely to come on or across the floor. The sheeting is usually 1 in. or 1¼ in. carried on 4-in. by 2-in. or 6-in. by 2-in. joists at intervals up to 2 ft. or 2 ft. 6 in. according to the circumstances. In the case of a floor on concrete beams these joists may be supported at their ends by the side moulds of the beam, although additional centre supports may also be necessary according to the span.

Where the floor rests on steel beams the joists may be supported on chocks and wedges resting on the lower flange, as shown in *Fig.* 21. If the beam is encased the boarding or joists will have to be supported on props, securely braced from below, unless special iron clips or bolts

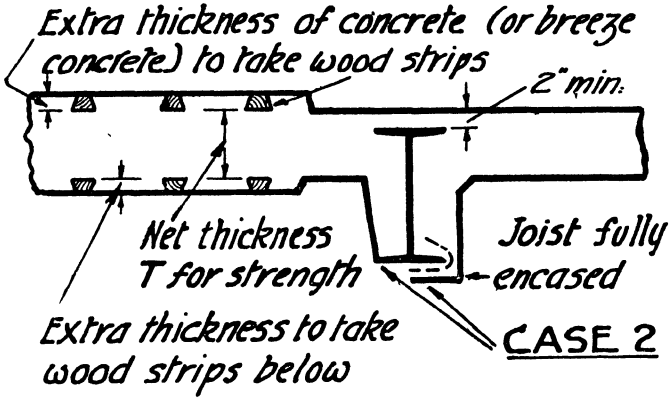


FIG. 22.

are devised to fit on the lower flange to hold the centering temporarily and allow of its final removal.

Using ordinary Portland cement the boarding forming the soffit to floor slabs must not be struck until seven days have elapsed after pouring, while the floor should not be fully loaded for five or six weeks. Nor should a new concrete floor be used to support the props from a higher one unless it is mature and at the same time is structurally capable of taking the load without overstressing. If a test load is called for, this must not exceed 1½ cwt. per square foot, gradually applied and removed not earlier than eight weeks after the last portion was poured.

A plank walk raised clear of the reinforcement must be provided if the concrete is conveyed in barrows.

### Placing Reinforcement.

The centre lines of the bars should be clearly marked or chalked on the upper surface of the boarding before the reinforcement is placed. This will save much time in the end. If the same centres continue for some distance it is worth while making a template by notching the lower edge of a board at the correct intervals, through which the bars can pass and become correctly placed automatically.

Crossbars are placed above the main bars in the bottom, and below in the top of a slab. The whole mesh must then be firmly wired together by 16-gauge soft iron wire at the crossings to resist displacement during concreting. Great care must be exercised that the cranked-up bars in the top of the slab do not roll over and fall into the centre or bottom. It is essential, particularly in continuous slabs, that the cover above the

top bars be equal to that below the lower bars, namely ½ in. The lower cover can be maintained conveniently by short lengths of ½-in. bar placed immediately on the boarding and withdrawn as concreting proceeds. They must, of course, be pulled along as soon as the concrete has been tamped beneath the main bars and can support it, and not left until the concrete has commenced to set, when removal would injure the slab. The bars in the top can be supported on small concrete blocks of the required size to hold the reinforcement at its proper level. Wood blocks should not be used on account of the danger of their being accidentally concreted in. This risk is minimised by the use of concrete blocks, metal chairs or spacers.

### Concreting.

Commencing at one support, a definite area of slab should be enclosed by vertical boards of the exact depth of the slab and temporarily fixed to act as runners for the screeding board and to form a rigid side against which the concrete can be rammed. It may be necessary to notch these to allow bars to pass through. The concrete must be poured to its full thickness in one operation and must be thoroughly pushed and tamped under and around the bars. The final spading should leave the upper surface a little on the high side so that the screeding board, when worked slowly forward with a to-and-fro movement, brings the surface to true level against a slight pressure of wet concrete. After that neither the concrete nor the projecting bars should on any account be disturbed.

Where it is not possible to finish the whole slab at one pouring the joint should be chosen along the centre of the slab, midway between two supports. On no account should it be made over or near the main supports of a slab. A temporary board should be fixed to finish against, and the joint washed and grouted before continuing next day.

### Finishes to Slabs.

On the underside it is sometimes required that " grounds " or tapered strips of wood be concreted in to carry ceilings, etc. In these cases additional thickness must be allowed to take the strips without encroaching on the normal cover under the bars as shown in *Fig.* 22.

The same applies to boarded finishes to the upper surface, although generally the extra thickness is executed in breeze concrete. To place wood strips in the net thicknesses of slab given later, either in the top or bottom, may reduce the strength by more than one-half.

Granolithic may be laid as soon as the slab has taken its final set, providing every care is taken not to vibrate or injure the green concrete. Scoring and fluting the surface may be carefully undertaken while the

surface is soft, by the free use of planks and walking boards. For the production of hard and wear-resisting surfaces there are other preparations which are applied either in liquid form, such as silicate of soda, or as a finishing coat.

## Single-Span Slabs.

Single-span slabs may be defined as slabs which span between and rest on two supports at their ends only. The notes which follow must not be read as applying to slabs with one or two overhanging ends. The supports referred to are those closest together between which the main slab bars run. There will usually be additional end supports—such as the two end walls of a long corridor—but these are of no value in supporting the bulk of the slab. The supports may be brick walls, concrete beams, steel joists or a combination of them, as shown in *Fig.* 21. The particulars for spans up to 10 ft. are given in *Table* 13. The span " S " refers to the distance, centre to centre, of the supports ; " B " gives the minimum end bearing on walls in inches ; " T " gives the thickness of the slab in inches ; column " m " gives the diameters and centres of main bars in inches, and column " c " the number and diameter of crossbars. The remainder of the table gives the volume in cubic feet of the concrete and the weight of reinforcement required per square yard of slab, together with particulars of the length and bending of the bars. The depth of the crank is measured outside to outside of bar, leaving $\frac{1}{2}$ in. cover of concrete top and bottom when in place.

The following example will illustrate its use: Required a slab to span between a wall and joist 4 ft. 6 in. clear, as shown in *Fig.* 21. If the breadth of the top flange is 4 in., the span " S " becomes 4 ft. 6 in. + 2 in. + $2\frac{1}{4}$ in. = 4 ft. $10\frac{1}{4}$ in.

Referring to *Table* 13, and reading from line " 5 ft. and under," we find we require a 4-in. slab with $\frac{3}{8}$-in. main bars at 8-in. centres and six $\frac{5}{16}$-in. crossbars. If there are 20 square yards of slab (note that this area must include that let into the wall in the case of a chase left in a wall) then 60 cu. ft. of concrete and 162 lb. of steel are required. Each main bar will be 5 ft. $5\frac{1}{2}$ in. long, cranked 3 in. to a 6-in. slope 4 in. from one end, and both ends bent up or down 2 in. Alternate bars will be reversed so that a straight end runs on to a support between two cranked ends, throughout the length of the slab. The crossbars should extend the length of the slab, but if it is necessary to splice them the laps must be at least 18 in. long, well wired, and staggered on plan.

## Continuous-Span Slabs.

As their name implies, continuous-span slabs carry over three or more supports, the slab being monolithic or continuous over the support.

TABLE 13.—SINGLE-SPAN SLABS.

1·2·4 CONCRETE — SINGLE SPAN SLABS — LIVE LOAD 112 lbs. PER SQ. FT.

| SPAN S | END BEARING B IN. | SLAB THICKNESS T IN. | MAIN BARS m DIAM: IN. | MAIN BARS m CTRS: IN. | CROSS BARS ℄ AT NOT MORE THAN 12 IN CENTRES | QUANTITIES PER SQ. YARD OF FLOOR: CONCRETE CU: FT: | REINFORCEMENT LBS: | REINFORCEMENT LGTH. OF MAIN BARS | REINFORCEMENT BENT | REINFORCEMENT CRANK IN. |
|---|---|---|---|---|---|---|---|---|---|---|
| 3'-0" & UNDER | 3 | 4 | 1/4 | 7 | 4 - 5/16 | 3 | 5·3 | S+B+3" | SLOPE 6" 4" 2" 2" | 3 |
| 3'-6" " " | 3 | 4 | 1/4 | 6 | 4 - 5/16 | 3 | 5·7 | " | " " " | 3 |
| 4'-0" " " | 4½ | 4 | 1/4 | 5½ | 5 - 5/16 | 3 | 6·2 | " | " " " | 3 |
| 4'-6" " " | 4½ | 4 | 5/16 | 6 | 5 - 5/16 | 3 | 7·3 | " | " " " | 3 |
| 5'-0" " " | 4½ | 4 | 3/8 | 8 | 6 - 5/16 | 3 | 8·1 | " | " " " | 3 |
| 6'-0" " " | 4½ | 4 | 3/8 | 6 | 7 - 5/16 | 3 | 9·1 | " | " " " | 3 |
| 7'-0" " " | 6 | 4 | 3/8 | 5 | 8 - 5/16 | 3 | 11·6 | " | " " | 3 |
| 8'-0" " " | 6 | 4½ | 3/8 | 4½ | 9 - 5/16 | 3·375 | 12·8 | " | " SLOPE 7" " | 3½ |
| 9'-0" " " | 6 | 5 | 1/2 | 7 | 11 - 5/16 | 3·75 | 13·2 | " | " SLOPE 8" " | 4 |
| 10'-0 " " | 6 | 6 | 1/2 | 6 | 11 - 3/8 | 4·5 | 17·0 | " | " SLOPE 10" " | 5 |

If the slab overhangs the support at one or both ends, so as to form a cantilever, a special design is required; this is outside the scope of this book. The continuity has two effects: (1) it results in an economy of material, (2) it introduces certain conditions which it is important to appreciate because they are not so common or so vital in other types of building construction.

These conditions are the reverse moments at supports, causing tensional stresses in the top surfaces of slabs for some distance on each side of a support. These stresses, being taken only by the steel, call for the accurate placing of the reinforcement bent up over the supports. A load placed on one span always affects the spans on each side through this continuity, so that a large span continuous with a much smaller one will cause effects too complicated to explain here.

In the particulars that follow, therefore, it is assumed that the spans are of approximately the same order, deviating by, say, not less than 75 per cent. or more than 30 per cent. from the standard adopted. This can usually be achieved by inserting more walls or beams below or by rearranging their intervals. For convenience when spacing supports the inner spans should be kept constant to some even amount of feet and inches, while the two end spans should be made less. Always avoid larger end spans.

Particulars and sizes are given in *Table* 14, while *Figs.* 23, 24 and 25 illustrate the typical arrangement of bars. It will be noticed that the thickness of slab for any particular span is the same for end as for inner spans, but that the reinforcement is usually slightly heavier in the case of end spans.

In arriving at the lengths of the main bars (m),

$Se$ = the length of end span,
$Si$ = ,, ,, ,, inner ,,

as shown in *Fig.* 23, a section taken parallel to the main bars.

Note that the bars in the top run past the centre line of the secondary beam or joist by an amount "e" given in *Table* 14, and that the crank turns up at a length "d" on the other side: this point should be marked on the boarding to facilitate placing. At their straight ends they must run 6 in. past the centre line of the support. The crossbars, where they run over main beams, joists, or walls are also dealt with similarly, as indicated in *Fig.* 24. Crossbars, however, lie on top of main bars in the bottom of slabs, but below main bars in the top of slabs.

Two types of bar are required as main reinforcement to end spans, the one alternating with the other. The cranked end resting on the end support is bent as for single-span bars given in *Table* 13. Bars for inner spans are of one type but the cranked ends project alternately

TABLE 14.—CONTINUOUS-SPAN SLABS.

| 1·2·4 CONCRETE | CONTINUOUS SPAN SLABS | | | | | | | | | | | | | LIVE LOAD 112 lbs. PER SQ. FT. |
|---|---|---|---|---|---|---|---|---|---|---|---|---|---|---|
| | | END SPANS | | | | | | INNER SPANS | | | | | | |
| SPAN S | SLAB THICKNESS T IN. | MAIN BARS m DIAM: IN. | CTRS: IN. | WT: PER SQ. YARD | d | e IN. | LENGTHS | MAIN BARS m DIAM: IN. | CTRS. IN. | WT: PER SQ. YARD | d | e IN. | LENGTH |
| 3'-0" & UNDER | 4 | 1/4 | 9 | 5·1 | Se/5 | 12 | Se + & 10"<br>Se + 1'-7" | 1/4 | 9 | 5·7 | Si/5 | 12 | Si + 1'-9" |
| 3'-6" " " | 4 | 1/4 | 9 | 5·1 | " | 12 | " + 10"<br>" + 1'-7" | 1/4 | 9 | 5·6 | " | 12 | " + 1'-9" |
| 4'-0" " " | 4 | 1/4 | 9 | 5·1 | " | 12 | " + 10"<br>" + 1'-7" | 1/4 | 9 | 5·4 | " | 12 | " + 1'-9" |
| 4'-6" " " | 4 | 1/4 | 6 1/2 | 6·1 | " | 15 | " + 10"<br>" + 1'-10" | 1/4 | 7 1/2 | 6·0 | " | 15 | " + 2'-1" |
| 5'-0" " " | 4 | 1/4 | 5 1/2 | 6·7 | " | 15 | " + 10"<br>" + 1'-10" | 1/4 | 6 1/2 | 6·5 | " | 15 | " + 2'-0" |
| 6'-0" " " | 4 | 5/16 | 6 | 8·3 | " | 18 | " + 10"<br>" + 2'-1" | 5/16 | 7 | 8·2 | " | 18 | " + 2'-3" |
| 7'-0" " " | 4 | 3/8 | 6 | 10·7 | " | 21 | " + 10"<br>" + 2'-4" | 3/8 | 7 | 10·4 | " | 21 | " + 2'-6" |
| 8'-0" " " | 4 | 7/16 | 6 1/2 | 12·7 | " | 24 | " + 10"<br>" + 2'-7" | 7/16 | 8 | 11·8 | " | 24 | " + 2'-9" |
| 9'-0" " " | 4 1/2 | 7/16 | 6 | 13·7 | " | 27 | " + 10"<br>" + 2'-10" | 7/16 | 7 | 12·7 | " | 27 | " + 3'-0" |
| 10'-0" " " | 5 | 1/2 | 6 1/2 | 16·0 | " | 30 | " + 10"<br>" + 3'-1" | 1/2 | 7 1/2 | 15·1 | " | 30 | " + 3'-3" |

END BEARING B. QUANTITIES OF CONCRETE, CRANK & SLOPE MEASUREMENT OF BAR SAME AS EQUIVALENT SLAB THICKNESS IN TABLE 13

CROSSBARS C. ONE LESS THAN FOR EQUIVALENT SPANS IN TABLE 13 — OR 5/16" BARS AT NOT LESS THAN 12" C/C

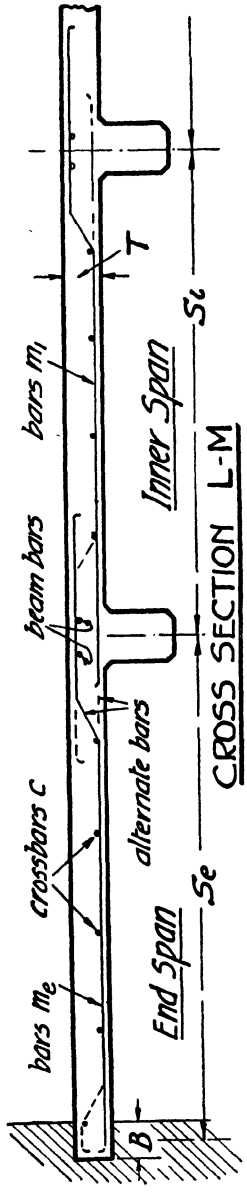


FIG. 23.

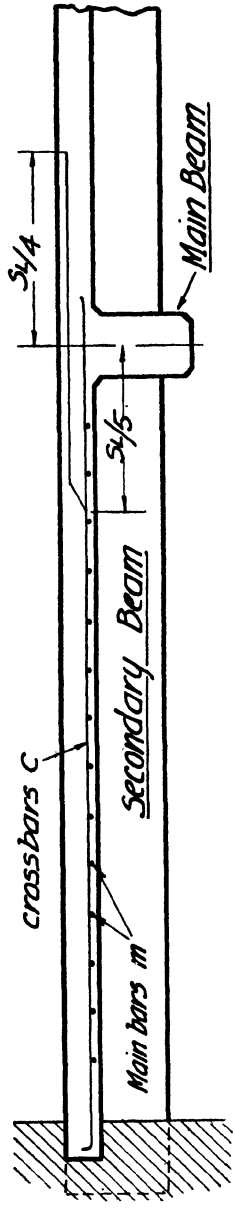


LONGITUDINAL SECTION.
FIG. 24.

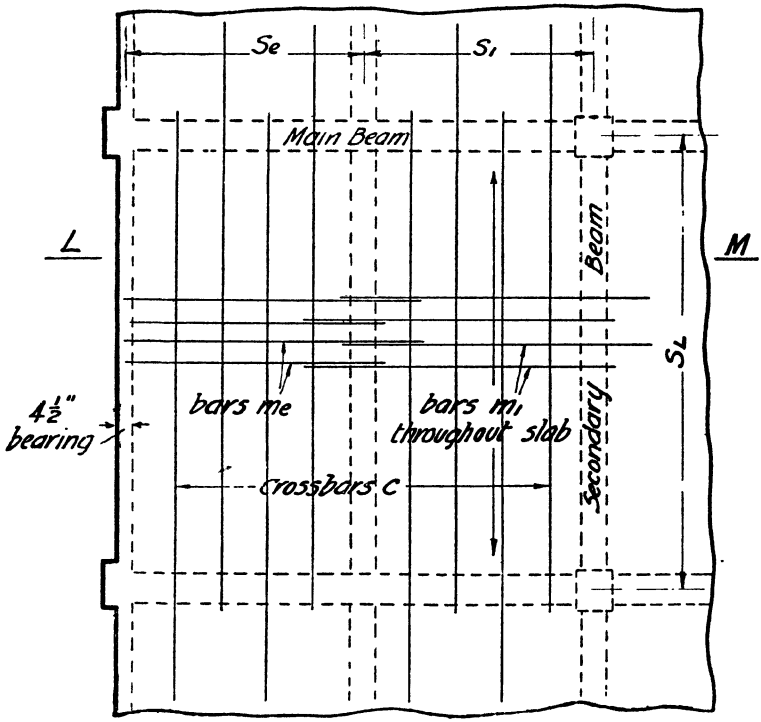


FIG. 25.—PLAN.

in opposite directions as indicated on section L—M (*Fig.* 23) and the plan *Fig.* 25.

The bending and lengths are dimensioned for slabs on concrete beams or passing wholly over the top flange of rolled steel joists. If the flange of the latter is raised to within 2 in. of the upper surface of the slab then the cranked-up bars will pass over freely, but their straight ends must be shortened so as to abut against the web of the joist, which must be haunched or encased with concrete.

The weights of reinforcement given include for crossbars and laps and must be considered a minimum. For convenience the size of bars may be increased, or their centres reduced, to maintain the same thickness of slab throughout a floor.

**Example.**—A floor slab is required to carry a maximum live load of 1 cwt. per square foot over concrete beams spaced at 5-ft. centres (*Si*) with an end bay span of 4 ft. 6 in. (*Se*) (equivalent clear end span 4 ft. 3½ in.).

From *Table* 14 the thickness of slab "T" is found to be 4 in. for inner and end spans. Also the reinforcement is similar, namely, $\frac{1}{4}$-in. diameter bars at $6\frac{1}{2}$-in. centres. Had the end bay been 5-ft. span then the end span reinforcement would have been $\frac{1}{4}$-in. bars at $5\frac{1}{2}$-in. centres. The lengths of the main bars would be 5 ft. 4 in. and 6 ft. 4 in. (an equal number of each to be supplied) for the end span and 7 ft. for the inner bays. Five $\frac{5}{16}$-in. crossbars are required in the end bays and four in the inner—note in the case of concrete beams the top bars of the beam take the place of a crossbar. With rolled steel joists extra crossbars would be required in these positions. The crossbars should be bent and placed as shown in *Figs.* 24 and 25.

**Quantities.**—For estimating purposes the quantities from *Tables* 13 and 14 will be found to be:

| | |
|---|---|
| Concrete . . . . | 3 cu. ft. per square yard of floor. |
| Reinforcement (end spans) . | 6·1 lb. ,, ,, ,, ,, ,, |
| ,, (inner spans) . | 6·5 lb. ,, ,, ,, ,, ,, |

## Roof Slabs.

Roof slabs that are not intended to carry any live load except that due to snow, etc., or an occasional person crossing them (such as the flat roof to a building having no easy access to the roof) may be constructed to carry an incidental load of 56 lb. per square foot instead of 112 lb. per square foot.

It is not desirable to reduce their thickness to a minimum as hair-cracking may result which will give trouble by allowing rain-water to percolate through, especially after a spell of dry weather. To make perfectly sure of a weathertight roof a continuous covering, such as asphalt, should be provided. A small fall should, of course, be arranged and an adequate drain-off.

As regards dimensions for the slab to carry 56 lb. per square foot, *Tables* 13 and 14 can be employed as before; but the steel, and thereby the weight of steel, may be reduced as follows for any particular span: The centres of the main bars "m" may be increased by 50 per cent. up to a maximum of 9 in. Thus the centres of all main bars in *Table* 13 may be 9 in. except for the 4-ft. and 8-ft. spans, which will be 8 in. and 7 in. respectively. In *Table* 14 all main bar centres may be 9 in. except for the 5-ft. end span, which will be 8 in.

## CHAPTER VII

# PANEL WALLS

WHILE, generally speaking, brick or concrete-block panel walls are cheaper than in-situ reinforced concrete walls, the latter have the advantage of being lighter and stronger and of stiffening a building very considerably.

A panel wall is built monolithic with the columns and beams between which it occurs, as shown in *Fig.* 26. The reinforcement consists of two meshes formed of horizontal and vertical bars which project into the panels on each side and above, and are lapped on to the bars projecting from below.

Openings of any size or shape may be left. In the case of a window or rectangular opening the bars forming the mesh would be cut and given a turn or hook at the side of the opening. In addition, two $\frac{1}{2}$-in. bars must be run as trimmers both vertically and horizontally around the opening, allowing $\frac{1}{2}$ in. to 1 in. cover.

The meshes are placed $\frac{1}{2}$ in. from the faces of the wall, and are to be so arranged that the bars are staggered in section, so that in elevation the double mesh appears to be one-quarter the size of the single mesh.

The thinnest internal wall should not be less than 3 in. thick and under 10 ft. long or high. The thinnest external wall usually adopted is 4 in., but large panels should be made thicker; also thicker walls should be adopted if a weatherproof job is required without additional protection.

*Table* 15 shows the thickness of wall and the reinforcement required, and gives the quantities per square yard of wall for average purposes and sizes. For special purposes, such as for retaining the ground in a cellar, or for stacking coal against, etc., special designs would have to be prepared to suit the circumstances.

The minimum lap to be given to the bars is as follows: $\frac{1}{4}$-in. bars, 15-in. lap; $\frac{5}{16}$-in. bars, 18-in. lap. This lap is shown as "*l*" in *Fig.* 26.

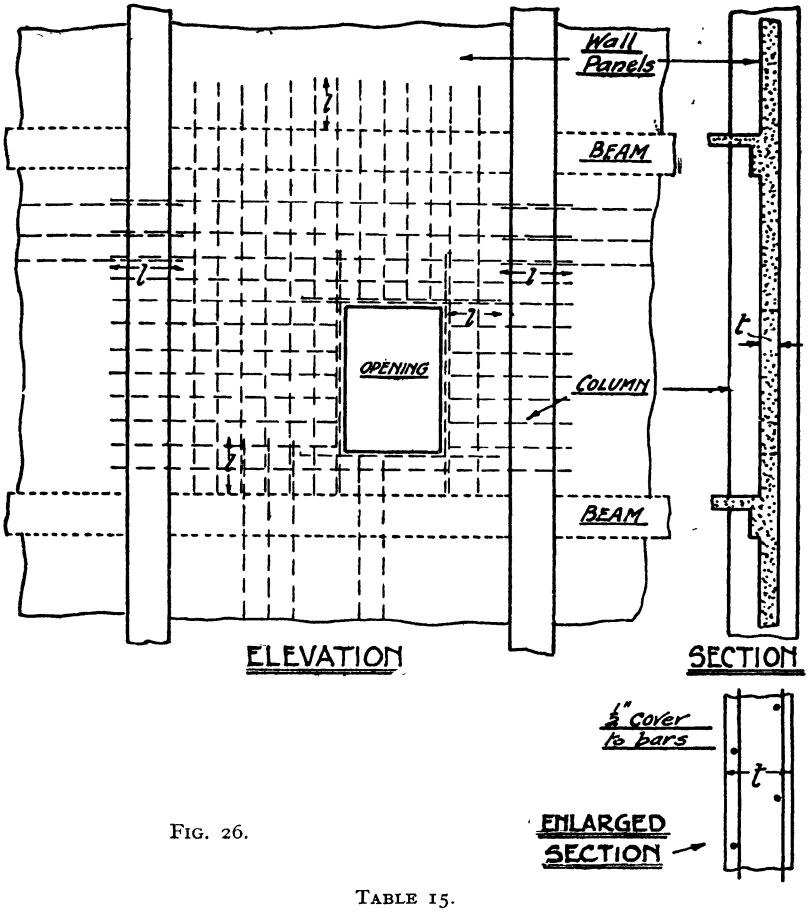


FIG. 26.

TABLE 15.

| Thickness of Wall, in. | Reinforcement for each side. | Quantities of concrete per sq. yard. (in cub. ft.). | Wt. of reinforcement allowing 10 per cent. per lap per sq. yd. (in lb.). |
|---|---|---|---|
| 3 | $\frac{1}{4}$ in. at 15 in. c/c. both ways | 2·25 | 5·3 |
| 4 | $\frac{1}{4}$ in. at 12 in. c/c. both ways | 3·00 | 6·6 |
| 5 | $\frac{5}{16}$ in. at 15 in. c/c. both ways | 3·75 | 8·4 |
| 6 | $\frac{5}{16}$ in. at 12 in. c/c. both ways | 4·50 | 10·5 |

## CHAPTER VIII

# STAIRCASES

THERE is some difficulty in describing the construction of a concrete staircase with definite and working details that will be applicable to general cases, because the plan of a building will influence to a considerable extent not only the rise, "going," and arrangement of the steps, but also the type of construction which will be most suitable. The space available for the stairs may necessitate the use of winders in some cases; with others a quarter-space or half-space landing may be arranged, while the question of support on one or both sides of the flights will influence the decision to use any one of the various methods that are possible.

A staircase can be considered as an intimate part of a building and one which is necessarily determined by the use, type, and arrangement of the building itself, and no very definite recommendation can be made without a knowledge of the general design and use of the structure, as the staircase must fit in with the plan and section as laid down on the drawings.

### Pre-cast Steps.

Reinforced concrete is an excellent material for the construction of staircases of all kinds, as the material is very adaptable and can be applied to many cases where the provision of support for other materials of construction would present considerable difficulty and expense. The material may be pre-cast as single steps which are built in as the work proceeds, or it may be in-situ concrete formed in the usual manner with shuttering.

The use of pre-cast steps does not call for special comment, as the units are easily made in a suitable mould and fixed by building in one or both ends as with stone steps. It is advisable to introduce a small amount of reinforcement in each unit to facilitate handling without breakage, and in the case of steps fixed at one end only some reinforcement in the upper surface is necessary on account of the cantilever action that has to be provided for.

### In-situ Stairs.

The best concrete staircase is the in-situ reinforced concrete type when straight flights can be constructed with a support at each side or each end, and when simple shuttering is possible and no winders or

other special shapes are required. Generally speaking, staircases can be defined as coming under one of the following descriptions:

(*a*) Supported on both sides of the flight.
(*b*) Supported on one side only.
(*c*) Supported at both ends of the flight.
(*d*) Independent flights.

To some extent it is possible to get a partial combination of these types, for example when the flight is supported on one side and at each end.

Under the first-mentioned type, when the stairs are supported on both sides, is the simple staircase flight constructed between two walls or partitions of sufficient strength to carry safely the whole weight of the stairs and the load which will be placed upon them. In this instance it is only necessary to design the stairs as a reinforced concrete slab having a span equal to the width of the flight, and an example of this kind is described in detail later. Type (*b*) is probably the most common case met with in practice. It means that one side of the flight will come against the wall of the staircase well, and the end of the steps can be built or carried into the wall to give a bearing of, say, $4\frac{1}{2}$ in., but the outer edge of the flight will be free and unsupported so far as walls or partitions are concerned. The flight can then be designed as a slab cantilever, with reinforcement in the upper surface; but this will not be generally economical, and it is preferable to provide a reinforced concrete string at the outer edge, which supports the actual steps and which in turn is supported at the top and bottom of the flight according to the circumstances. This method is economical and generally satisfactory, as the concrete string acts as a simple reinforced beam which covers the ends of the steps and provides fixing for the balusters. The reinforcement in the steps is carried into the string, and the whole is concreted in one operation to give a monolithic structure.

The third type mentioned (*c*) is that when the flight is supported at both ends only, and this method is by no means uncommon in practice. When thin partitions only are provided to enclose the staircase, and the ends of the steps cannot be directly supported or built in, it is necessary to give a bearing at each end of the flight by means of beams at the landings or floor levels, and conduct the weight of the stairs directly to such bearings. In some instances the actual flight is designed as a beam with reinforcement in the soffit to take the tension, the concrete steps providing the resistance to compression; but this method is not generally economical, and the provision of reinforced concrete strings on each side of the flight to act as supporting beams is preferable. If it is necessary to expose the ends of the steps, as in the type known in wooden stairs as the "cut string" type, then the reinforcement in the

soffit only is necessary, because the use of the beam at the end of the steps results in what is known as the "close string" type, and while the latter is generally suitable and acceptable, there are cases when the effect required necessitates the former method.

### Section of Steps.

The actual step may be moulded to any reasonable shape, but generally the ordinary vertical riser face will be adopted for the small building,

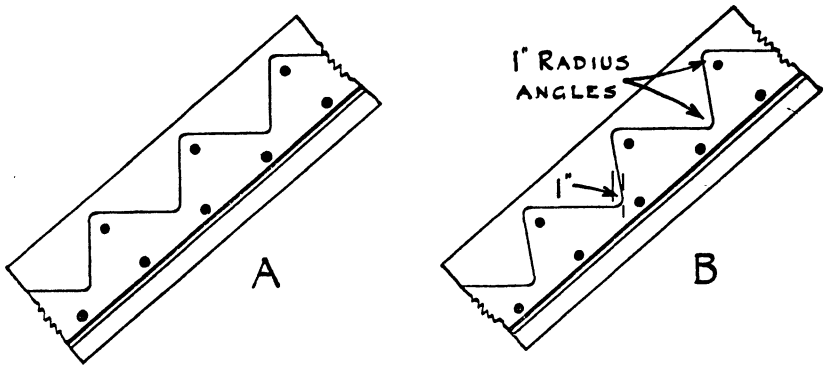


FIG. 27.—IN SITU STEPS.

and the junction with the tread will be slightly rounded off to prevent a sharp angle, which would be liable to chip off under rough usage. This type of step is shown at A in *Fig.* 27. The use of the ordinary nosing adopted for wooden stairs is not satisfactory, as it is liable to be broken away, and also necessitates additional work in execution, which is seldom justified.

If it is desired to increase the width of the tread over that provided by the actual "going," this may be done by using the section given at B in *Fig.* 27, when it will be seen that the riser face is formed with a slope of 1 in. outward at the top, thus giving a larger tread, and at the same time avoiding a thin projection or overhang which would be subject to damage. The angles at the junction of tread and riser should be slightly rounded, as this will increase the resistance to wear and render the steps easy as regards cleaning down.

In the case of pre-cast steps, as shown in *Fig.* 28, these are made with a special "back" joint, which provides for a good bearing for each step on the one below. It will be noticed that the tread of the lower step extends under the riser of the step above for a distance of about

1½ in., and the joint is then made at right angles to the slope of the soffit. This method gives a bearing for the vertical thrust and also for the inclined pressure due to the tendency of the steps to slide down the angle of the staircase. Three rods are usually provided in pre-cast steps

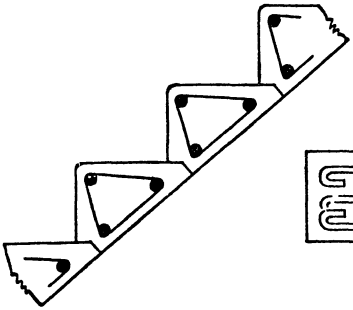

FIG. 28.—PRE-CAST STEPS.

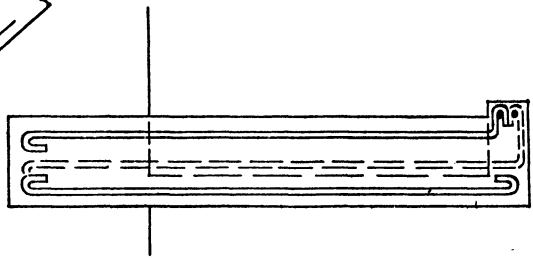

FIG. 29.—CANTILEVER STEPS.

to prevent breakage when handling and resist tension when fixed, and these should be tied together with links as indicated on the section.

*Fig.* 29 gives the details of a cantilever step when one end only is carried by a wall and the outer end is carried into a concrete string connecting all the steps in the flight. In this case the main reinforcement will be provided in the upper surface of the step.

## Baluster Fixing.

Some difficulty may be experienced in providing a simple and inexpensive method of fixing the balusters and handrail in the case of concrete staircases, but the difficulty can be overcome by a little careful consideration of the possibilities. In the case of a flight of steps carried between two walls or partitions for the full length no baluster will be required and the handrail can be fixed in a simple manner by the use of wall brackets attached to the wall or partition on one or both sides of the flight as required. These brackets are obtainable in many different shapes and sizes, and are fixed in the ordinary manner to suitable plugs.

Wood balusters present more difficulty, as they cannot be satisfactorily attached directly to the concrete, and it is necessary to provide an intermediate member between the balusters and the concrete string. This can be done by the provision of a continuous wood capping, as shown in *Fig.* 30, which can be moulded, chamfered, or plain as desired, and may be any reasonable size to suit the string, and with a minimum thickness of 2 in.

The fixing of this capping is achieved by the use of bolts ½ in. or less in diameter placed in the shuttering and concreted in when the staircase is under formation; these bolts are left standing up above the level of the concrete the correct distance to suit the thickness of the capping. When fixing the latter a sinking is made for the bolt-head and the hole is subsequently filled in with a small piece of wood to give a neat finish. The balusters are fixed to the capping in the ordinary way by housing in the ends, and this can be done as simply as in the case of a wooden staircase.

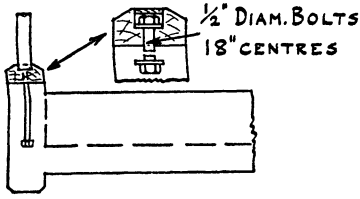


FIG. 30.—METHOD OF FIXING WOOD BALUSTERS.

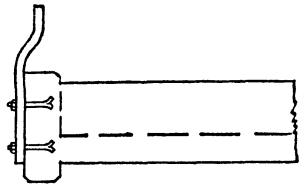

FIG. 31.—METHOD OF FIXING IRON BALUSTERS.

In many instances iron balusters are used in conjunction with concrete stairs. These are usually of simple plain square section, and their fixing does not present any difficulty; it is however desirable to secure them to the sides of the stringers (*Fig.* 31). The small rag bolts should be fixed in their correct positions in the shuttering to the sides of the stringer, and be cast in during concreting.

## Surface Finish.

Several different methods of finishing the surface of a concrete staircase are possible, and, generally speaking, almost any desired effect can be obtained. The finish of the soffit and strings will come under the ordinary heading of surface finishes, and needs no special comment here.

In the case of the treads, however, the question of a surface which will be non-slippery and at the same time wear-resisting has to be considered, and as the staircase cannot conveniently be finished in the one operation of placing the concrete the surface finish is usually applied as a distinct layer on the concrete.

In concreting the flight it is, of course, necessary to start at the bottom and work upward, whereas in the case of any applied plastic coat, which must harden before pressure is allowed, it is necessary to work from the top downward to avoid damage by the workman applying the material.

There are, of course, some exceptions to this rule, but these need not be dealt with in these notes.

The most general finish for the tread and risers is that obtained by the use of granolithic or similar material, applied by the plasterer or floor finisher, as a layer having a thickness of 1 to 2 inches according to requirements. When the tread surface is being laid it is advisable to form some sinkings or grooves near the front of step to give a good grip to the feet, and, in order to improve the wearing qualities, carborundum powder is sprinkled on each tread and ironed into the surface of the green concrete. In high-class work the surface of the concrete is covered with various materials, such as cast stone, marble, patent compositions, or rubber.

## Constructional Details.

Some details of the common types of concrete staircases suitable for small buildings are here given as a guide to the contractor who may be desirous of using reinforced concrete. The drawings and particulars provided can be applied in the typical cases given or adapted when applicable to somewhat similar cases.

The plans and sections illustrated in *Figs.* 32 and 33 show the general arrangement for a staircase 3 ft. wide to travel a height of 9 ft. in two plain flights with a half-space landing mid-way between the two floors. The supports are provided by a bearing on the wall enclosing the staircase, by the raking beams or strings, and by cross-beams at the landing and upper floor level. In designing the reinforced concrete work the steps are considered as slabs or beams having a span equal to the width of the flight, and the reinforcement is placed in the lower surface with the ends carried on to the wall bearing into the string and finished with hooks.

## Reinforcement.

A schedule of the reinforcement required is given in *Fig.* 34, which gives the size and shape of each rod together with the total length of all the rods and the weight of steel involved. The various rods should be cut to length and bent to the specified shape. The different members can then be built up as a series of cages or units as illustrated in *Fig.* 36 and when wired together the units can be placed in the shuttering and fixed in position ready for concreting. Assembly in this manner will ensure accuracy, and at the same time it is an economical method which permits the maximum supervision and inspection of the reinforcement.

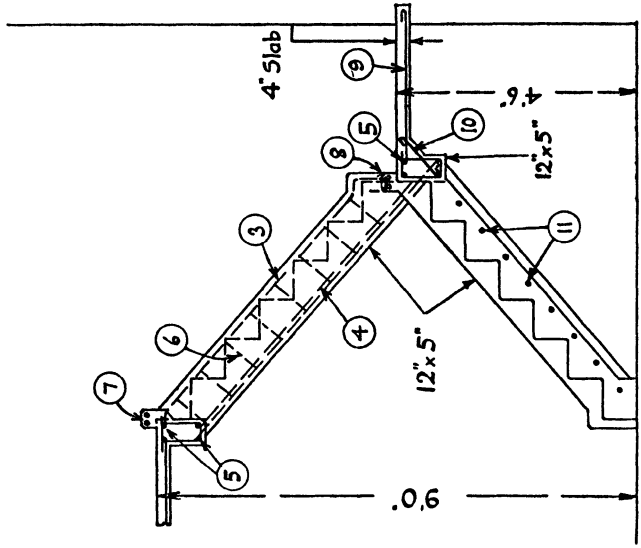


FIG. 33.—SECTION.

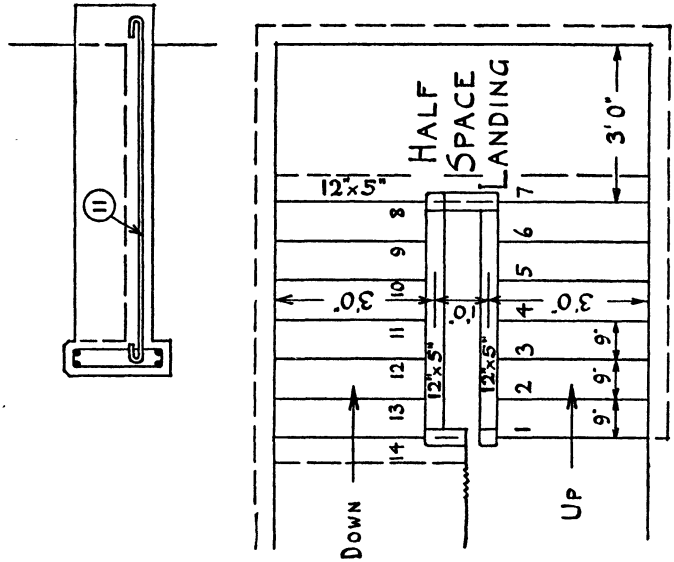


FIG. 32.—PLAN.

TYPE I.

## SCHEDULE OF RODS FOR TYPE 1

| Bar No | Diam | Length | Shape | No Off | Total Length | Total Weight |
|---|---|---|---|---|---|---|
| | | | | | | Lbs |
| 1 | 3/8" | 6' 9¾" | 2½" 5' 5¾" 3" 2" 3" 3½" To fit ½" Rod | 2 | 13' 7½" | 5·4 |
| 2 | 3/8" | 6' 9" | 6½" 6½" 4½" To fit ½" Rod 2" 5' 5" | 2 | 13' 6" | 5·4 |
| 3 | 3/8" | 7' 1¼" | To fit ½" Rod 5' 5½" 2¼" 2" 3½" 2" 3½" 2" 3½" 2" 7" | 2 | 14' 2½" | 5·6 |
| 4 | 3/8" | 8' 2" | 2" 5½" 7' 0½" 6½" 1¾" 1¾" To fit ½" Rods | 2 | 16' 4" | 6·5 |
| 5 | ½" | 8' 5" | 7' 5½" 1¼" 1¼" 3" 3" | 8 | 33' 8" | 23·5 |
| 6 | No 8 S.W.G. | 3' 2" | Stirrups for Nos 1, 2, 3, 4, & 5. | 27 | 117' 2" | 7·5 |
| 7 | 3/8" | 5' 1½" | 4' 2" 1¼" 1¼" 3" 3" | 2 | 10' 3" | 4·1 |
| 8 | 3/8" | 1' 10½" | 1' 2" 1" 1" 3" 3" | 2 | 3' 9" | 1·5 |
| 9 | 3/8" | 3' 11½" | 3' 1" 1" 1" 3" 3" | 8 | 31' 8" | 12·6 |
| 10 | 3/8" | 1' 7" | 1' 0½" 1" 1" 3" 3" | 8 | 12' 8" | 5·0 |
| 11 | 3/8" | 4' 2½" | 3" 3" 1¼" 1¼" 3' 3" | 16 | 67' 4" | 25·3 |

FIG. 34.

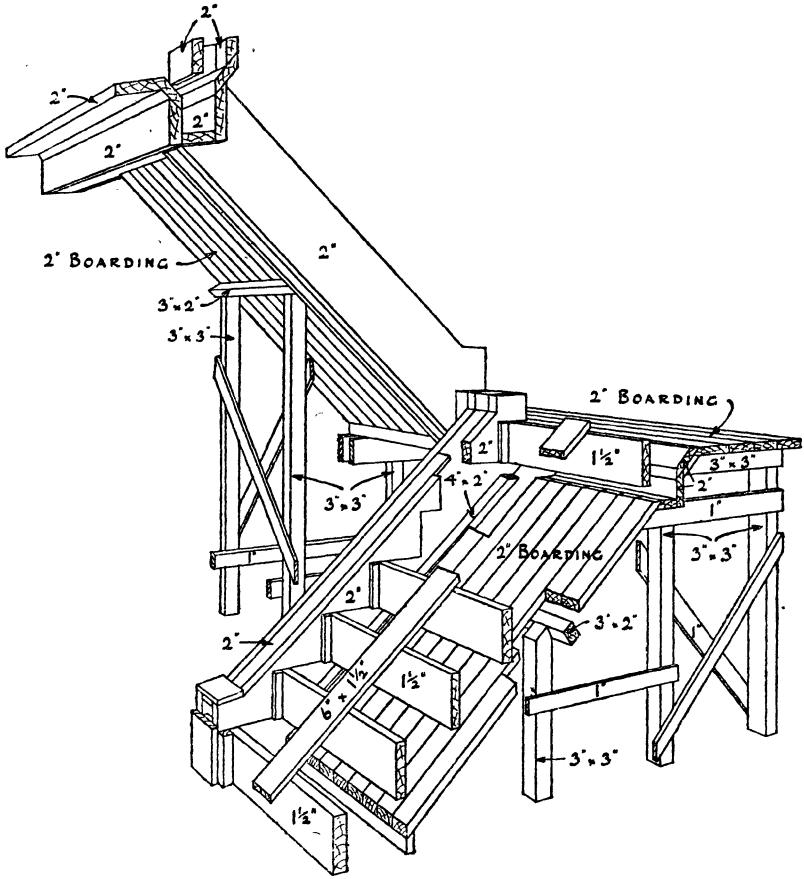


FIG. 35.—SHUTTERING, TYPE I.

## Shuttering.

The shuttering for a staircase of this kind is a fairly simple arrangement, and a general indication of a suitable construction is given in *Fig.* 35. Each particular instance will require to be dealt with according to circumstances, and the diagram should be taken as a rough guide only; while it may appear complicated in the illustration it will in reality prove a simple structure that can be erected by any good carpenter.

The outer face of the string is confined by a plain 2-in. board built up with longitudinal members and cross battens where the total depth

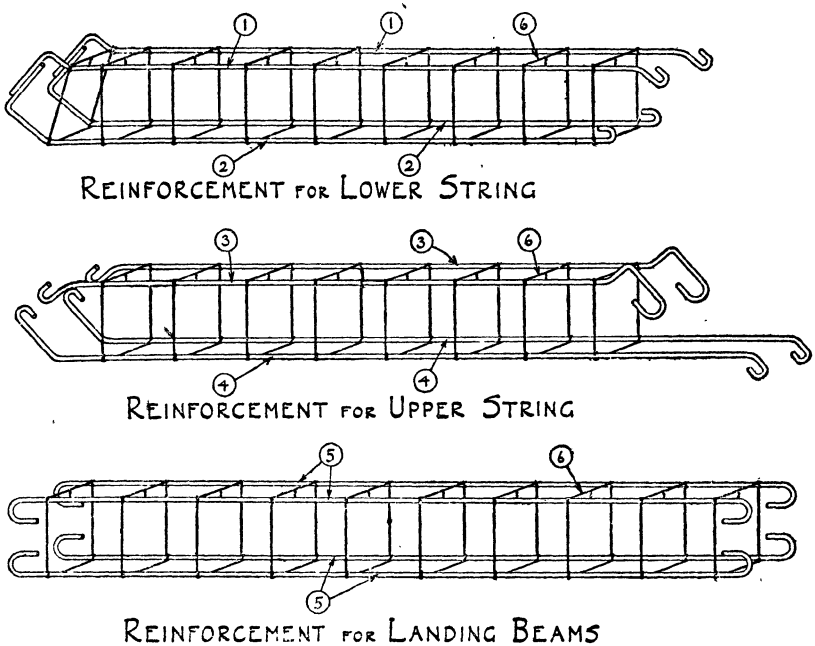


FIG. 36.—TYPE I.

makes this necessary, and the inner face of the same member is held by a plain board notched out on the lower edge for the actual steps. The soffit of the flight is supported by 2-in. boarding supported as required by bearers and struts, and the steps are held up by vertical boards only placed at each riser face. These boards are held at each end and are also tied together at one or more points in the width by longitudinal battens nailed on to the upper edges as indicated.

The landings and beams are dealt with by shuttering erected on similar lines to that employed for floors.

It will be seen that the concrete in the actual steps is not confined by horizontal boards on the top of the tread, and for this reason care must be exercised in mixing and placing the material. If the mix is made too wet there will be a tendency for the upper concrete to push out the lower concrete by causing it to flow over the top edge of the riser boards. It is necessary to use the minimum amount of water in the mix and place the material carefully in position in small quantities and without forcing the speed of the work.

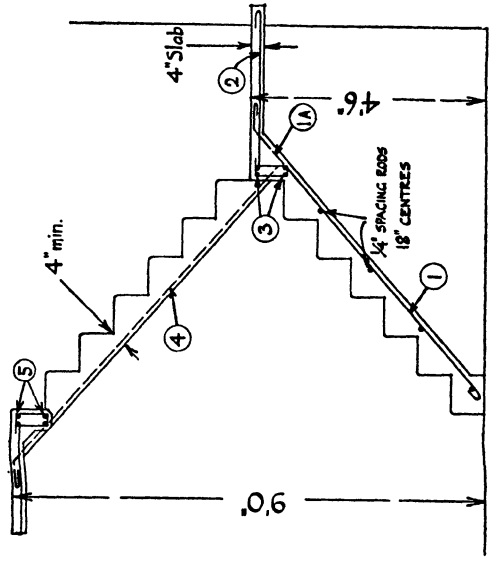


SECTION.

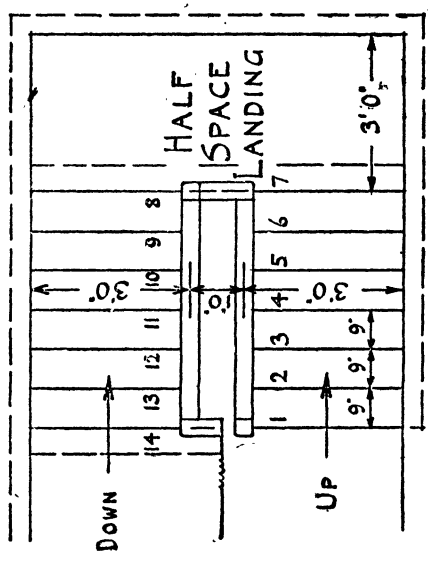


PLAN.

FIG. 37.—TYPE 2.

| Bar No. | Diam | Length | Shape | No. Off | Total Length | Total Weight |
|---|---|---|---|---|---|---|
| | | | | | | LBS |
| 1 | 3/8" | 6'2¼" | 4" 2" To fit ½" rod 2" 5' 10½" | 3 | 18'6¾" | 7·4 |
| 1A | 3/8" | 8'4" | 6' 10" 2" 4" 8½" 4" 2" | 3 | 25'0" | 10·0 |
| 2 | 3/8" | 3'6" | 2" To fit ½" rod 2" 1" 3'0" | 9 | 31'6" | 12·6 |
| 3 & 5 | ½" | 8'3" | 3" 2½" 3" 2½" 7'6" | 4 4 | 66'0" | 43·6 |
| 4 | 3/8" | 8'3" | 2" 8" To fit ½" rod 7'2" | 3 | 24'9" | 9·9 |
| 4A | 3/8" | 8'11" | 8½" 7'6½" 1" 4" To fit ½" rod 3" 3" | 3 | 26'9" | 10·7 |

FIG. 38.—SCHEDULE OF REINFORCEMENT, TYPE 2.

If horizontal boards are employed on the tops of the treads great difficulty will be experienced in execution, as each tread board must be fixed individually as the concreting of each step is completed ; in addition, the actual method of fixing will involve considerable additional labour to the shuttering to secure efficient support. A little experience in the placing of the concrete will soon indicate the correct method of handling the material, and no trouble will then be met with in this respect.

The method of bending and wiring the reinforcement is shown in *Fig.* 36.

Details of a staircase when support is provided at the top and bottom of each flight only, without the use of raking beams or strings, are given in *Figs.* 37 and 38, the latter being a schedule of the reinforcement

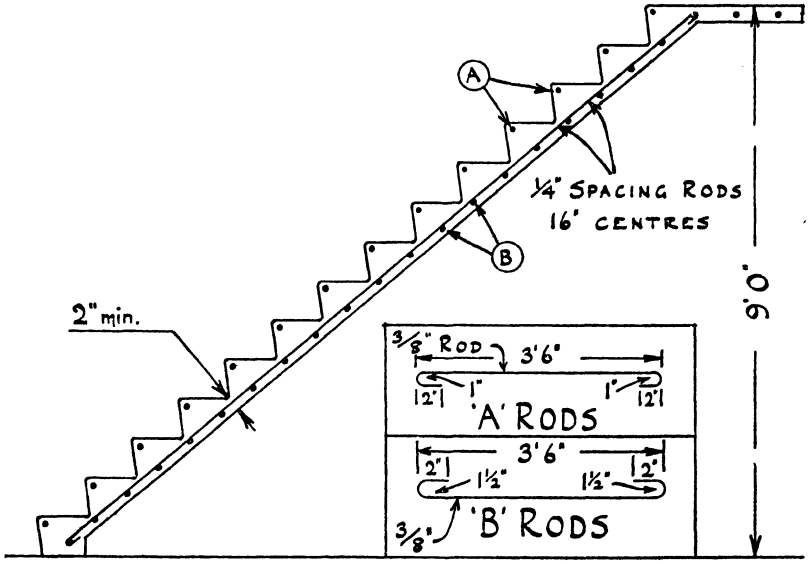


SECTION.

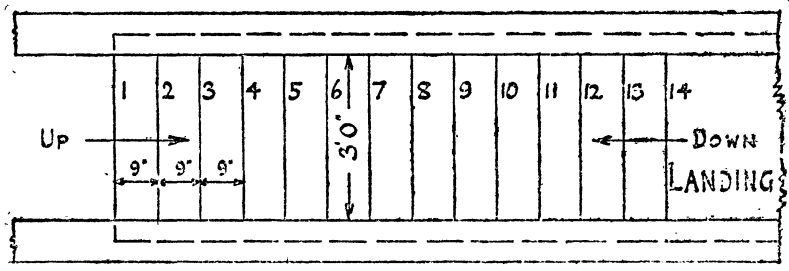


PLAN.

FIG. 39.—TYPE 3.

required. This is an extremely simple type of stairs. The shuttering required is of a plain character, as the treads finish against a plain board, and with plain boarding for the soffit and vertical boards for the riser faces the requirements are met.

A third type is illustrated in *Fig.* 39, consisting of one straight flight rising 9 ft. and built between two supporting walls. The plan and section given, together with the details of the reinforcement, are so simple that no further explanation or notice is necessary.

A type frequently met with in cottage work is that illustrated in *Figs.* 40 and 41, consisting of a straight flight with winders at the bottom. The arrangement of the shuttering and the method of carrying the winders will depend on the circumstances of the case, but a simple method is that of providing a small block of concrete at the narrow end of the winder treads with radiating rods in each tread from this support to the bearing at the wide end of the step. In some instances a dwarf wall is

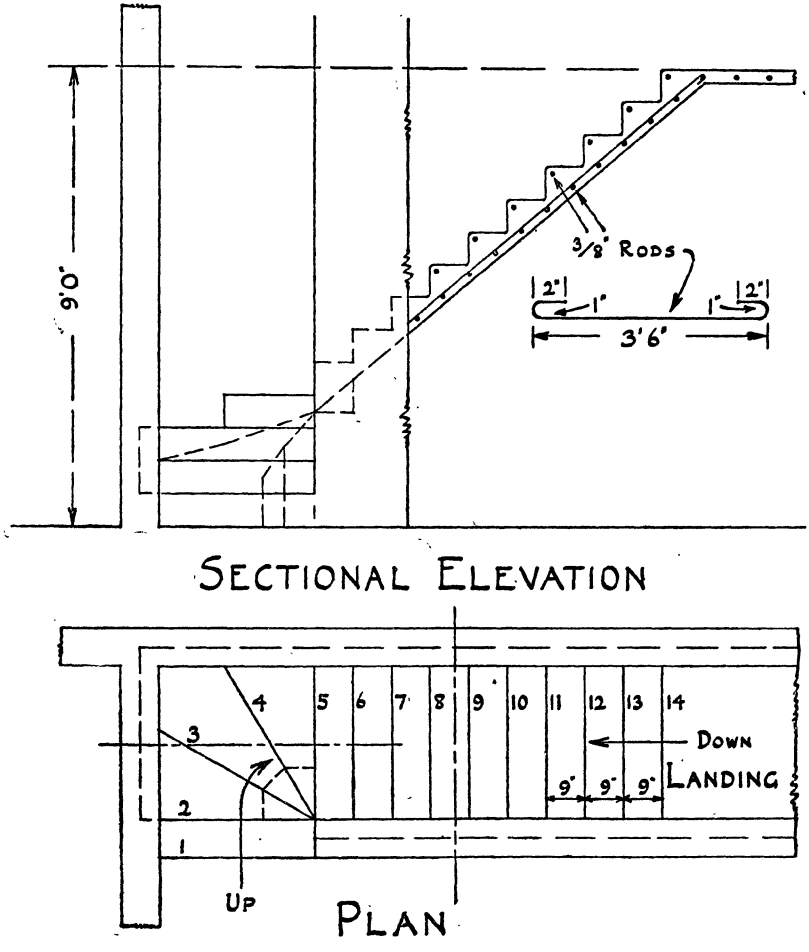


FIG. 40.—TYPE 4.

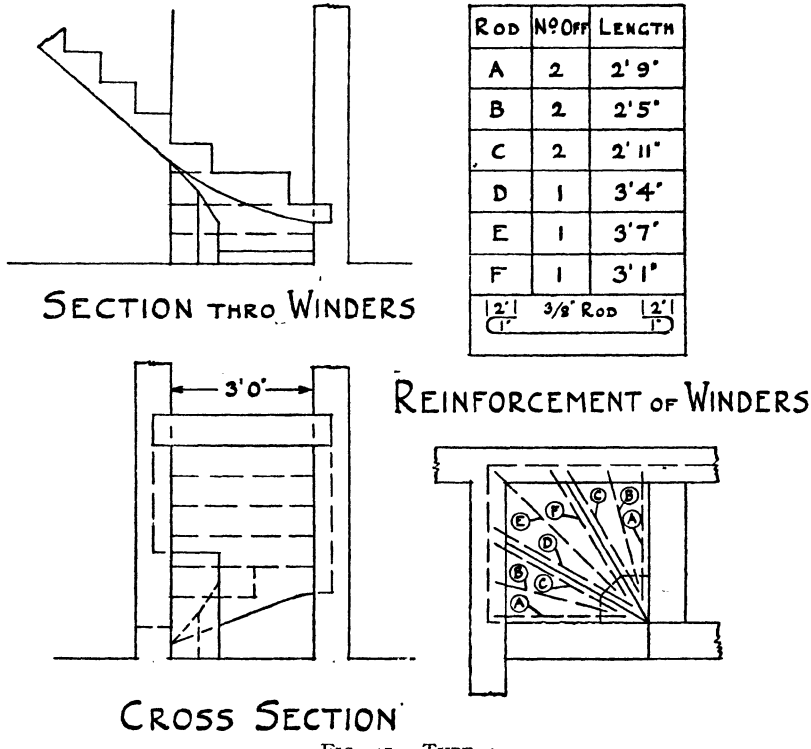


| ROD | No OFF | LENGTH |
|---|---|---|
| A | 2 | 2' 9" |
| B | 2 | 2' 5" |
| C | 2 | 2' 11" |
| D | 1 | 3' 4" |
| E | 1 | 3' 7" |
| F | 1 | 3' 1" |

FIG. 41.—TYPE 4.

built at the end of the straight portion of the flight, and the space under the winders can then be filled in with dry hardcore on which the concrete is laid with the use of vertical riser boards only.

Many other examples of reinforced concrete staircase work could be given, but these notes should be sufficient to enable the reader to execute the class of staircase required for small buildings in a satisfactory manner and understand the general principles that govern the design in this material.

## CHAPTER IX

# SAW TOOTH ROOFS

THE object of these notes is to put before the reader the methods to be followed in the construction of roofs, where reinforced concrete is employed as the material for the trusses, in a manner which should enable the work to be executed at a reasonable cost without risk of failure. While large-span trusses of special form constructed with reinforced concrete are employed in large buildings, the adoption of this material will generally be found on a large scale in the saw-tooth type, or, as it is commonly known, the " north-light " roof, and the reason for this is not difficult to find. The north-light truss is practically universal for all modern factory buildings, particularly in the single-story type ; this class of structure is invariably designed to give a large number of equal bays with a uniform span, and thus repetition work is an important factor in the selection of the material to be employed.

Reinforced concrete is particularly suitable and economical in those buildings where repetition work is possible on a large scale as the formwork can be repeatedly used without alteration, and the use of up-to-date appliances for bending reinforcement, mixing and hoisting, and handling generally will be justified. Thus the labour costs will be reduced to a minimum.

It is, of course, quite feasible to employ reinforced concrete trusses for comparatively small buildings or for roofs having different spans, but generally speaking the maximum advantages of this material will be apparent in a scheme which provides for considerable repetition. One of the disadvantages of concrete trusses is the increased dead weight of the roof, but this is not serious as the additional strength required can be economically provided owing to the nature of the material used. Generally speaking, concrete trusses are used as pre-cast members, as the cost of manufacture is reduced by executing the concreting at the ground level and hoisting the complete member after it has sufficiently hardened. In the case of the formwork this is quite a simple matter if the complete truss is cast horizontally in the mould on a level platform, as all strutting and propping are eliminated. The actual placing of the concrete and reinforcement is also much easier if the work is done at the ground level. In fact the casting of a roof truss at ground level is a job which can be undertaken by any contractor, whereas the construction of a reinforced concrete roof truss in position calls for considerable skill and experience in that class of work.

**Method of Manufacture.**

Assuming that the usual practice of pre-casting is adopted the methods to be followed are described in the subsequent notes.

A large level platform is formed by any convenient means, and this will generally be found possible by putting down some planking held together by battens or bearers on the underside and arranged to give a truly level surface on which to place the formwork for the first truss. The mould is extremely simple, consisting of boards on edge which are cut and placed to give the outline of the truss and each member comprising the complete unit, as indicated in *Fig.* 42. The mould is built up with a number of triangular units, each of which corresponds to the space enclosed by three adjacent members. These triangular units can be braced, strutted, or stiffened in any way required within the triangle without obstructing the placing of the reinforcement or concrete. The mould is made slightly deeper than the thickness of the truss, say, 1 inch, in order to give a hold on the truss below when casting the second and subsequent trusses. The first truss is made the correct thickness by placing 1-in. boarding at the bottom of the mould, and the boarding cut for this purpose can be prepared in the first instance and used as a template for the making of the moulds. All boarding used should be wrot and treated with mould oil to prevent the concrete adhering to the timber. The sections of the mould are usually kept in position by small notched distance pieces, clamps, or straps attached to the top edges of the formwork after the reinforcement is placed and before concreting is commenced.

The necessary holes through the principal rafters for the attachment of purlins, etc., and through the tie beams for fixing shafting, bearings, or similar items, are provided by the insertion of pieces of gas barrel of the required internal diameter, cut to the exact distance between the opposite sides of the mould ; these are held in position during concreting by a short length of rod or bolt passed through holes cut in the formwork (*Fig.* 43). When the gas barrel is accurately cut and bolts are used, these act as ties during concreting and the shuttering will be rigidly held without the necessity of the notched distance-pieces previously mentioned. The withdrawal of the bolts when the concrete has hardened will leave the sleeve pieces in the concrete as a permanent protection to the holes, and allow for the attachment of other members to the truss without injury to the concrete.

When the shuttering is complete and the reinforcement is in position the placing of the concrete is commenced and the complete truss is concreted at one time without any break which would allow the material to harden partially at any point before the members of the truss are complete.

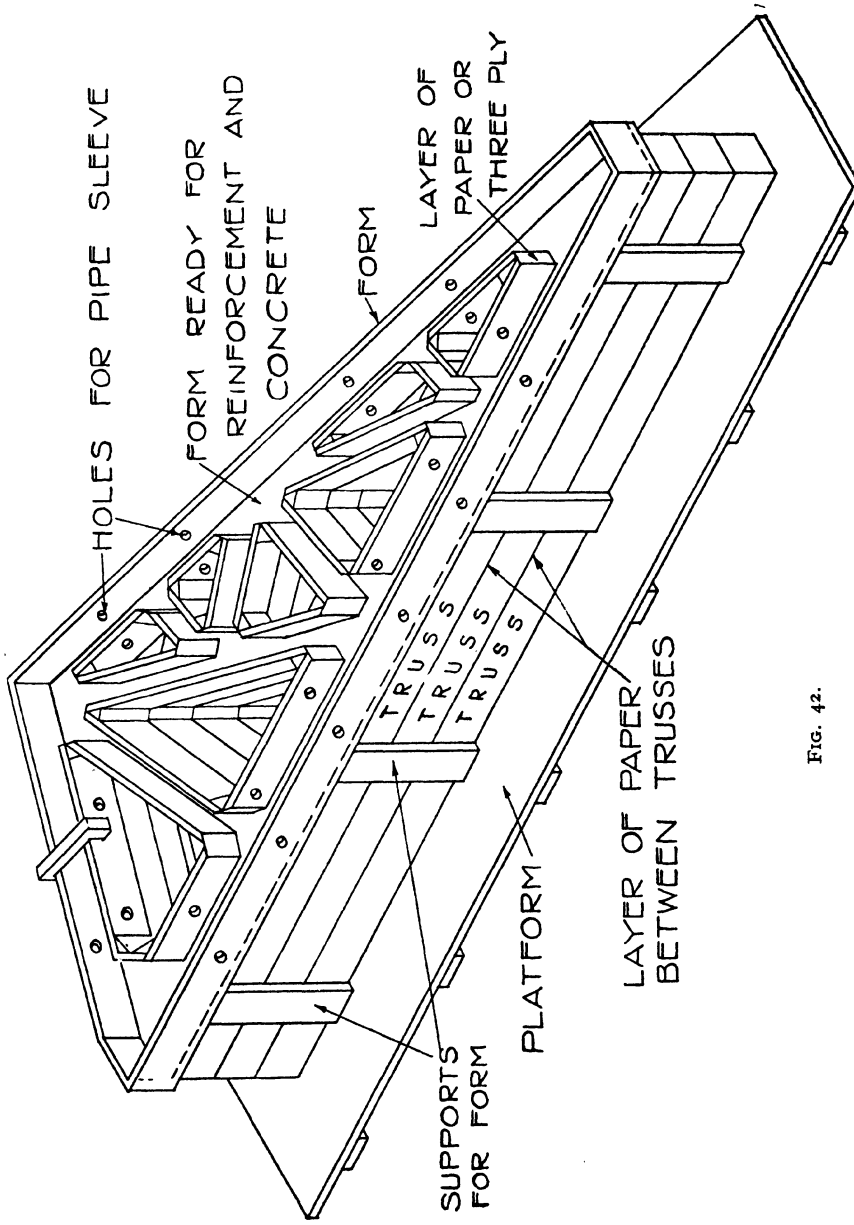
HOLES FOR PIPE SLEEVE
FORM READY FOR REINFORCEMENT AND CONCRETE
FORM
LAYER OF PAPER OR THREE PLY
TRUSS
TRUSS
TRUSS
LAYER OF PAPER BETWEEN TRUSSES
PLATFORM
SUPPORTS FOR FORM

Fig. 42.

The material should be mixed with the correct volume of water to give a plastic mix and carefully tamped during the whole of the time the concrete is being placed to ensure a dense material which is well worked around all the steel rods and links, and to avoid air pockets or bubbles which result in weak concrete and defective surfaces.

When the initial set has taken place and while the concrete is green

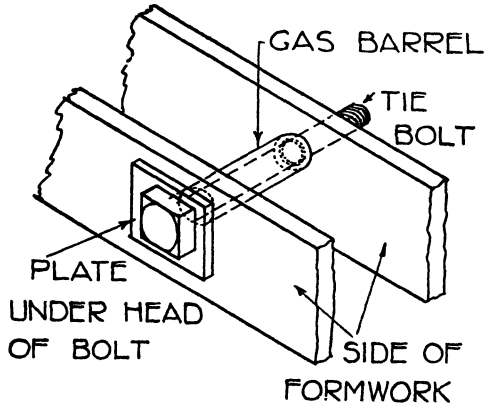


FIG. 43.

the bolts or ties can be slightly slackened to ease the shuttering and allow easy removal when the next truss is to be made. The subsequent trusses are cast on top of the first truss by simply raising the shuttering vertically the requisite amount as shown in *Fig.* 42, where it is indicated as being kept at the right level by supports of the correct lengths placed at intervals. The mould, as previously mentioned, is of sufficient depth to overlap the truss below to keep the trusses uniform in size; thus the under truss acts both as a guide to the shuttering and as a base to the form. In order to prevent adhesion between the truss already cast and the wet concrete to be placed for the next, the surface of the truss is covered with a layer of oiled paper, cut to the shape of the member and placed in the mould before the reinforcement is put in position.

The process of concreting and raising the mould is continued until a stack is built up to a height at which further work becomes comparatively uneconomical owing to the expense of hoisting and placing materials several feet above ground level. This level will generally be not more than about 5 ft.; when this is reached the shuttering is removed to a

new platform and another stack is built up, and so on until all trusses are cast.

Each stack will therefore consist of five or six trusses one above the other with a layer of oiled paper between, and they can be left to mature as long as necessary. These stacks can be distributed at any convenient points to reduce handling and transportation when hoisting and erection are being carried out.

## Reinforcement.

The preparation and assembly of the reinforcement is an important feature in making the trusses; great accuracy is necessary to ensure the steel being in the correct position in the formwork, and it must be firmly held in position during concreting. Owing to the large amount of repetition work it is advisable to make up one complete set of rods for one truss which can be tried in the formwork after it has been assembled and wired together, and when this is found to be correct it can be used as a pattern for all the remaining work. This sample set is advisable even when careful and complete drawings are supplied, as an error in making up a large number of sets will involve waste of money and time.

Generally speaking, each member of a roof truss will contain at least four rods as main reinforcement, and these will be held together by links at intervals. It is therefore quite a simple matter to build up the rods and wires into a cage-like shape, and by the use of some thin tie wire the complete set for each member can be held together and handled as one unit. The junction of the rods in the adjacent members can be completed when the reinforcement is being placed in the forms if the rods are all correctly bent and hooked to avoid any work other than the actual placing and wiring together when the assembly is being done.

Typical illustrations of the reinforcement for different members built up ready for placing in the forms are given in *Figs.* 44, 45 and 46.

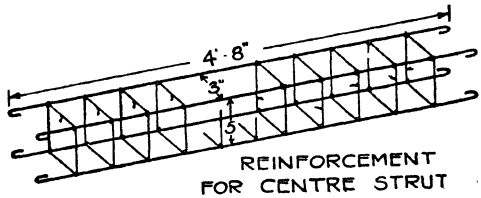


FIG. 44.

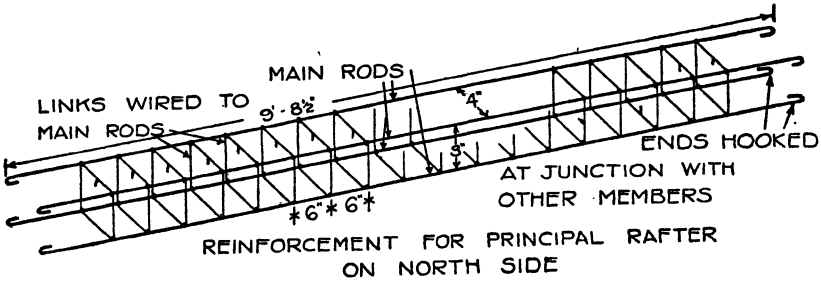


FIG. 45.

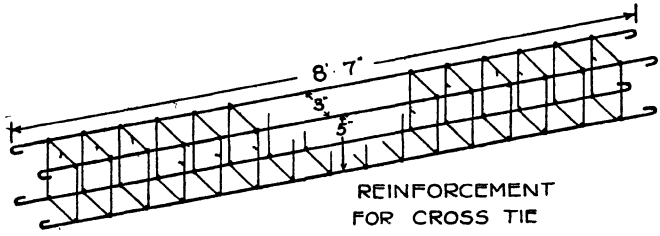


FIG. 46.

## Handling Trusses.

When the trusses are sufficiently seasoned and erection is commenced the question of handling and hoisting must be considered; this matter is important if damage to the concrete is to be avoided and erection costs kept down. The average weight of a truss having a 20-ft. span will be 19 cwt., and for a 30-ft. span about 59 cwt. Generally speaking, a travelling crane which can take the truss off the stack and travel to the point of erection and handle directly into position is the most convenient and expeditious. The trusses can, of course, be lifted by means of a pole, pulleys, and hand winch if other plant is not available.

It will facilitate handling considerably if the sling for hoisting is placed in the correct position at the outset. The truss when being raised should have the main tie beam horizontal, and the whole member should be evenly balanced on each side of the sling. In order to achieve this the sling should be placed around the main or principal rafter on a line drawn through the centre of gravity of the whole truss. In order to assist the contractor to deal with this point the correct position has been determined for the 20-ft. and 30-ft. spans, and *Figs.* 47, 48 and 49 show where the sling should be attached to give a properly balanced lift.

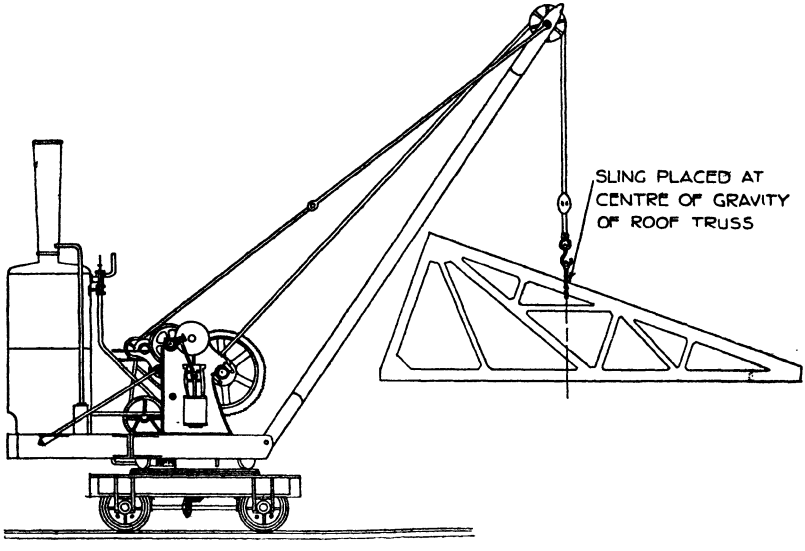


FIG. 47.

When the truss is being lifted from the stack it is necessary to raise it off the truss below sufficiently high to allow the sling to be passed round the principal rafter; this is usually done by passing a bolt through one of the holes left in this member for attachment of lifting tackle, and the truss is wedged and packed up to avoid undue strain while this is

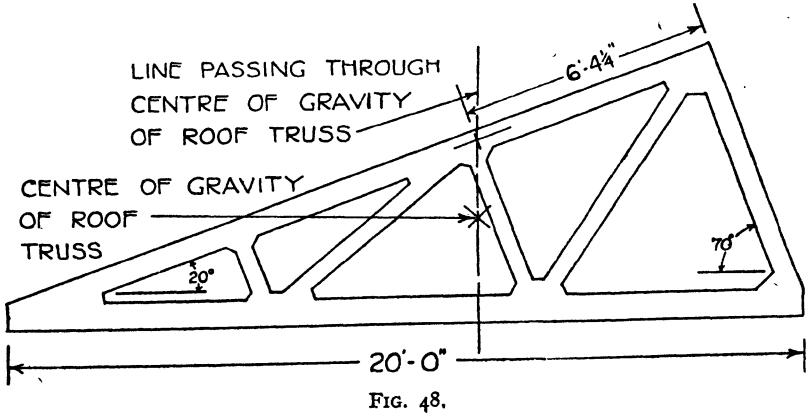


FIG. 48.

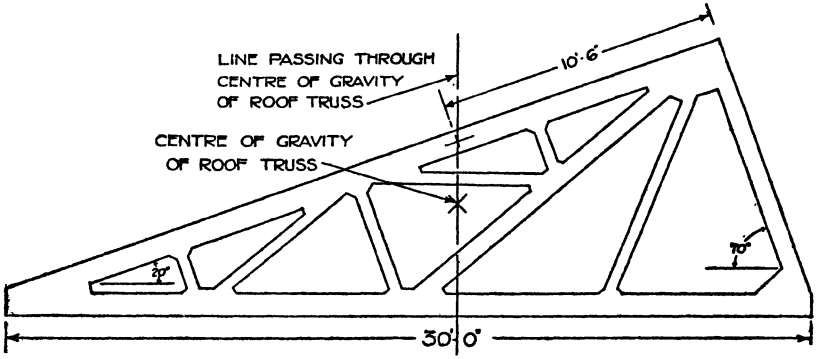


FIG. 49.

being done. The method of handling, hoisting, and erecting generally will be one that can be carried out to suit the circumstances in any particular case, and no further comments are necessary except that it will be worth while taking a few special precautions to prevent damage to the trusses. If the trusses are inclined to be in any degree insufficiently seasoned, or there is any risk in handling owing to awkward working conditions, it is advisable to lash a pole on one or both sides of the truss during hoisting and erection to make the members assist one another, to prevent damage by accidental blows, and avoid any tendency to "whip" sideways when swinging the truss round to the correct position.

## Design of Trusses.

It is not proposed to deal in detail with the calculations and designing of reinforced concrete roof trusses, but a few general notes may be given as a guide.

The design of the truss will depend on two main factors, viz. (*a*) the span and (*b*) the loads. The first mentioned will be determined by the general plan of the building and the considerations of economical design, and need not be further considered here except to mention that 20 ft. is usually adopted for small buildings, and 30 ft. is adopted for larger buildings or where it is necessary to reduce the supporting columns or piers to the minimum number.

Loads will consist of

(1) The dead load of the roof itself, including the trusses, purlins, and roof covering;

(2) Wind pressure, which will include the necessary allowance for any superimposed external load such as snow;

(3) An allowance for any loads caused by the attachment of shafting,

conveyors, motors, or any equipment to be supported by the trusses when the building is in use.

In arriving at the allowances for these loads the designer will endeavour to work to the minimum figure sufficient to meet the circumstances. This does not imply that any risks should be taken or that insufficient material should be justified on the grounds of economy, but it is important that only material really required is provided, and the designer must base his design on sound scientific lines.

In the particulars given herein the loads have been based on the following figures:

(1) The dead load is taken at 50 lb. per foot super, and this figure will provide for a covering of asphalt on the reinforced concrete slab.

(2) The wind pressure provided for equals an allowance of 18 lb. per foot super measured at right angles to the slope.

(3) An allowance of 5 cwt. on each truss considered as a hanging load on the tie beam at any point; this should be sufficient to provide for shafting or any ordinary load likely to be applied to one truss.

In the case of factory roofs it is extremely important to make some provision for a load on the tie-beam, even when this is not specially asked for by the building owner, because it may not be realised by him that loads will be applied in this way; such loads may not be necessary at the outset, but developments and changes in machinery, shafting, or other equipment may be required at a later date and it is wise to make provision for a reasonable contingency of this kind.

Special cases may occur in which exceptional loads or conditions have to be dealt with and in such cases special trusses must be designed, and the particulars here given would not be applicable as the examples given are only intended to cover the ordinary or usual type of buildings where the north-light truss is suitable.

The method of supporting the ends of the trusses will vary according to the circumstances, and no definite details can be given which will necessarily cover all cases. In a building where only one bay in width is required the trusses can be carried on the walls at each end, but in buildings over one bay in width one end of the truss must be supported by a valley beam or column. The method of connection will depend on whether the valley beam or column is pre-cast or cast in-situ, and to some extent on the type of gutter and roof covering employed. Some typical details which can be used for ordinary cases are illustrated in *Figs.* 50 and 51.

It is a simple matter to cast the trusses with some of the rods left projecting from the ends of the tie beams where it is necessary to incorporate the truss with an in-situ column or valley beam, as the insertion of some pieces of timber in the end of the form fitting around the rods and

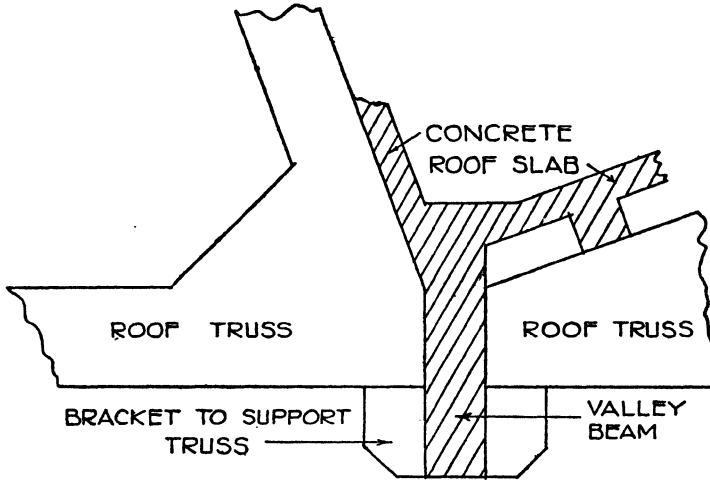
CONCRETE
ROOF SLAB
ROOF TRUSS
ROOF TRUSS
BRACKET TO SUPPORT
TRUSS
VALLEY
BEAM

FIG. 50.

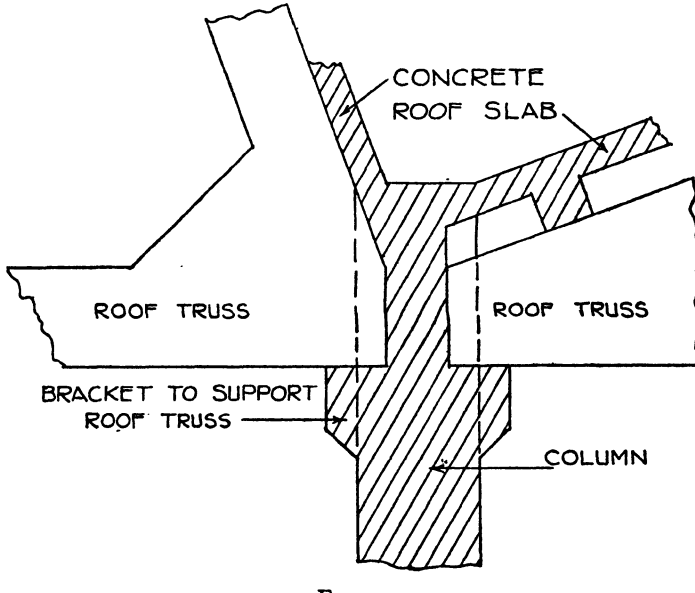
CONCRETE
ROOF SLAB
ROOF TRUSS
ROOF TRUSS
BRACKET TO SUPPORT
ROOF TRUSS
COLUMN

FIG. 51.

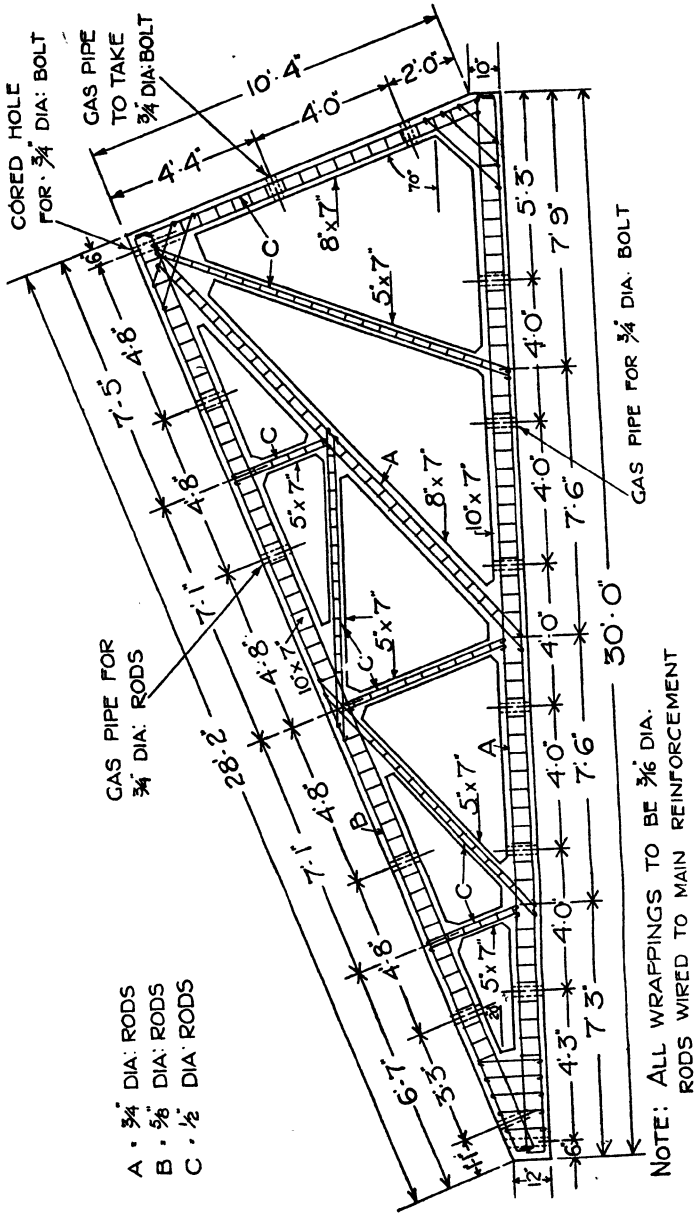
CORED HOLE FOR ¾" DIA: BOLT
GAS PIPE TO TAKE ¾" DIA: BOLT
GAS PIPE FOR ¾" DIA: RODS
GAS PIPE FOR ¾" DIA. BOLT
A = ¾" DIA: RODS
B = ⅝" DIA: RODS
C = ½" DIA: RODS
NOTE: ALL WRAPPINGS TO BE 3/16" DIA. RODS WIRED TO MAIN REINFORCEMENT
10'-4"
4'-4"
4'-0"
2'-0"
1'-0"
7'-0"
8"x7"
5"x7"
10"x7"
7'-5"
4'-8"
7'-1"
28'-2"
6'-7"
5'-3"
4'-3"
7'-3"
7'-6"
7'-9"
30'-0"
1'-2"
1'-6"

FIG. 52.

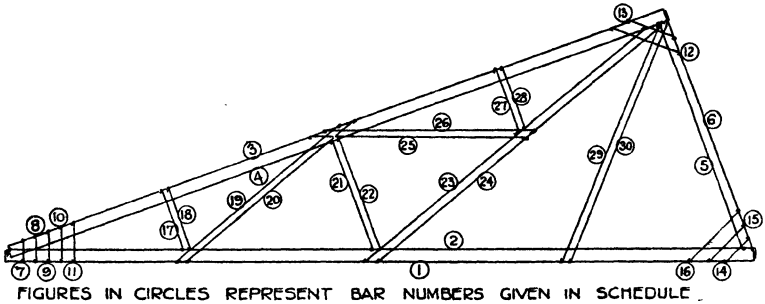


FIG. 53.

| | SCHEDULE OF RODS | | | | | |
|---|---|---|---|---|---|---|
| BAR No. | DIA. | LENGTH | SHAPE | No OFF | TOTAL LENGTH | TOTAL WT. |
| 1 & 2 | ¾" | 30'-5½" | 5" 29'-7½" 5" | 4 | 121'-10" | 183 lbs |
| 3 | ⅝" | 28'-7" | 27'-8½" 5" 5½" | 2 | 57'-2" | 57 " |
| 4 | ⅝" | 28'-10" | 2" 5½" 27'-11½" 5" | 2 | 57'-8" | 58 " |
| 5 & 6 | ½" | 11'-0½" | 6" 9'-8½" 6" | 4 | 44'-2" | 30½ " |
| 7 | ½" | 1'-7¾" | 3" 10" 3" | 2 | 3'-3½" | 2½ " |
| 8 | ½" | 1'-10¼" | 1'-0½" | 2 | 3'-8½" | 3 " |
| 9 | ½" | 2'-0¼" | 1'-2½" | 2 | 4'-0½" | 3 " |
| 10 | ½" | 2'-2¾" | 1'-5 | 2 | 4'-5½" | 3 " |
| 11 | ½" | 2'-4¾" | 1'-7 | 2 | 4'-9½" | 3½ " |
| 12 | ½" | 3'-8¾" | 2'-11" | 2 | 7'-5½" | 5¼ |
| 13 | ½" | 2'-7¾" | 1'-10" | 2 | 5'-3½" | 3½ " |
| 14 | ½" | 2'-0¾" | 1'-3" | 2 | 4'-1½" | 3 " |
| 15 | ½" | 2'-8¾" | 1'-11" | 2 | 5'-5½" | 3½ " |
| 16 | ½" | 3'-6¾ | 2'-9" | 2 | 7'-1½" | 5¼ " |
| 17 | ½" | 3'-6¼" | 4" 2'-6½" 4" | 2 | 7'-0½" | 5¼ " |
| 18 | ½" | 3'-7¼" | 2'-7½" | 2 | 7'-2½" | 5¼ " |
| 19 | ½" | 9'-5¾" | 8'-6" | 2 | 18'-11½" | 13 " |
| 20 | ½" | 9'-10¼" | 8'-10½" | 2 | 19'-8½" | 14 " |
| 21 | ½" | 5'-6¾" | 4'-7" | 2 | 11'-1½" | 7½ " |
| 22 | ½" | 5'-8¼" | 4'-8½" | 2 | 11'-4½" | 7½ " |
| 23 | ¾" | 15'-7¼" | 14'-7½" | 2 | 31'-2½ | 46½ " |
| 24 | ¾" | 15'-5¼" | 14'-5½" | 2 | 30'-10½" | 46½ " |
| 25 | ½" | 9'-6¾" | 8'-7" | 2 | 19'-1½" | 13 " |
| 26 | ½" | 9'-4¼" | 8'-4½" | 2 | 18'-8½" | 13 " |
| 27 | ½" | 3'-8¼" | 2'-8½" | 2 | 7'-4½" | 5¼ " |
| 28 | ½" | 3'-8¼" | 2'-8½" | 2 | 7'-4½" | 5¼ " |
| 29 | ½" | 11'-3¾" | 10'-4" | 2 | 22'-7½" | 15 " |
| 30 | ½" | 11'-3¾" | 10'-4" | 2 | 22'-7½" | 15 " |

FIG. 54.

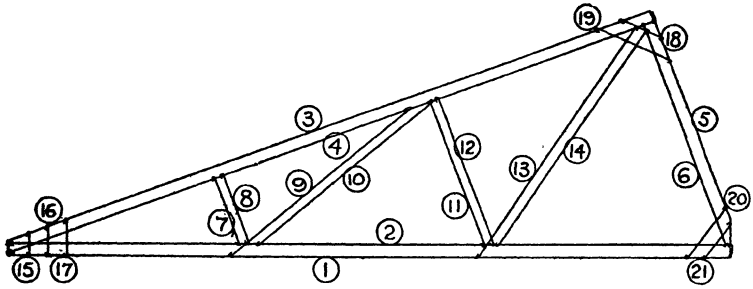


FIGURES IN CIRCLES REPRESENT BAR NUMBERS GIVEN IN SCHEDULE.

FIG. 55.

| | | SCHEDULE OF RODS | | | | |
|---|---|---|---|---|---|---|
| BAR No ○ | DIA. | LENGTH | SHAPE | No OFF | TOTAL LENGTH | TOTAL WT. |
| 1 | 5/8" | 20'-5" | 6" 3" 19'-8" | 2 | 40'-10" | 43 lb. |
| 2 | 5/8" | 20'-5½" | 19'-8⅝" 4" 3" | 2 | 40'-11" | 43 " |
| 3 | ½" | 19'-5" | 18'-8½" 4" 3" | 2 | 38'-10" | 26 " |
| 4 | ½" | 19'-7" | 4" 3" 18'-10⅝" | 2 | 39'-2" | 26 " |
| 5 | ½" | 7'-7" | 5'-10" 4" 9" | 2 | 15'-2" | 10 " |
| 6 | ½" | 7'-5½" | 6'-5½" 4" 4" | 2 | 14'-11" | 10 " |
| 7 & 8 | ½" | 2'-8" | 3" 3" 1'-11" | 4 | 10'-8" | 7½ " |
| 9 | ½" | 7'-2" | 6'-5½" | 2 | 14'-4" | 9½ " |
| 10 | ½" | 6'-10" | 6'-1" | 2 | 13'-8" | 9½ " |
| 11 & 12 | ½" | 4'-10½" | 4'-2" | 4 | 19'-6" | 13 " |
| 13 | ½" | 8'-4" | 7'-7½" | 2 | 16'-8" | 11½ " |
| 14 | ½" | 7'-11" | 7'-2½" | 2 | 15'-10" | 11 " |
| 15 | ½" | 1'-4" | 7½" | 2 | 2'-8" | 2 " |
| 16 | ½" | 1'-6" | 9½" | 2 | 3'-0" | 2 " |
| 17 | ½" | 1'-8" | 11½" | 2 | 3'-4" | 2¼ " |
| 18 | ½" | 1'-10" | 1'-1½" | 2 | 3'-8" | 2½ " |
| 19 | ½" | 2'-10½" | 2'-2" | 2 | 5'-9" | 4 " |
| 20 | ½" | 2'-4½" | 1'-8" | 2 | 4'-9" | 3½ " |
| 21 | ½" | 1'-9½" | 1'-1" | 2 | 3'-7" | 2½ " |

FIG. 56.

preventing the concrete from being filled into the form for the required distance from the end will present no difficulty and mean very little expenditure.

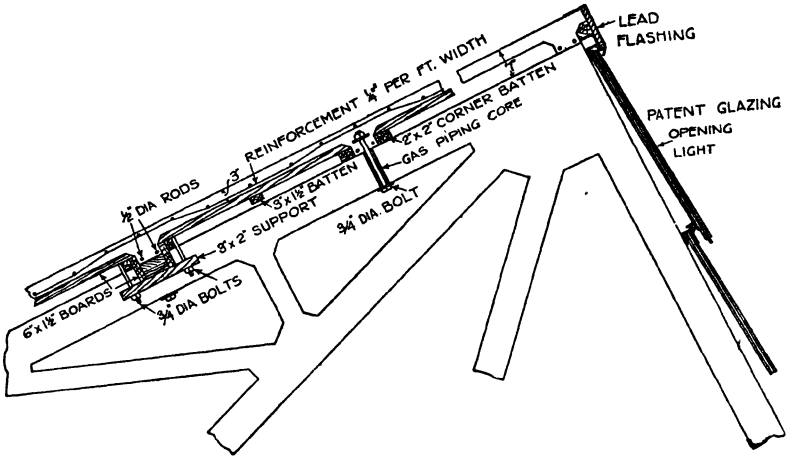


FIG. 57.

A detail of the reinforcement for a 30-ft. span truss is given in *Fig.* 52, and diagrams and schedules for all the rods in a truss of this type and span are given in *Figs.* 53 and 54, while similar information for a truss having a span of 20 ft. is given in *Figs.* 55 and 56.

The attachment of the purlins to the trusses can be effected in an efficient manner by leaving holes in the main rafters through which bolts can be passed, and these bolts can be used for fixing the purlins directly to the rafters or for the attachment of cleats to which the purlins are applied. The holes for these bolts should be formed in the main rafters by the use of gas-barrel sleeves, as previously described, to prevent damage to the concrete. The fixing of the purlins is illustrated in the diagrams (*Figs.* 57 and 58) and no further description is necessary, especially as this is a matter which can be solved by the contractor in the case of the particular details given not being applicable in any instance.

The method and material to be used for the roof covering, the question of opening roof lights, and many similar items will depend on circumstances, and no definite rules can be laid down in these notes, which are intended to apply primarily to the work of constructing reinforced concrete north-light trusses and the principles described for this work apply to all work apart from the covering used.

In conclusion it may be stated that the most important point in

connection with reinforced concrete roof truss construction is that the quality of the work should at all times be of the highest.

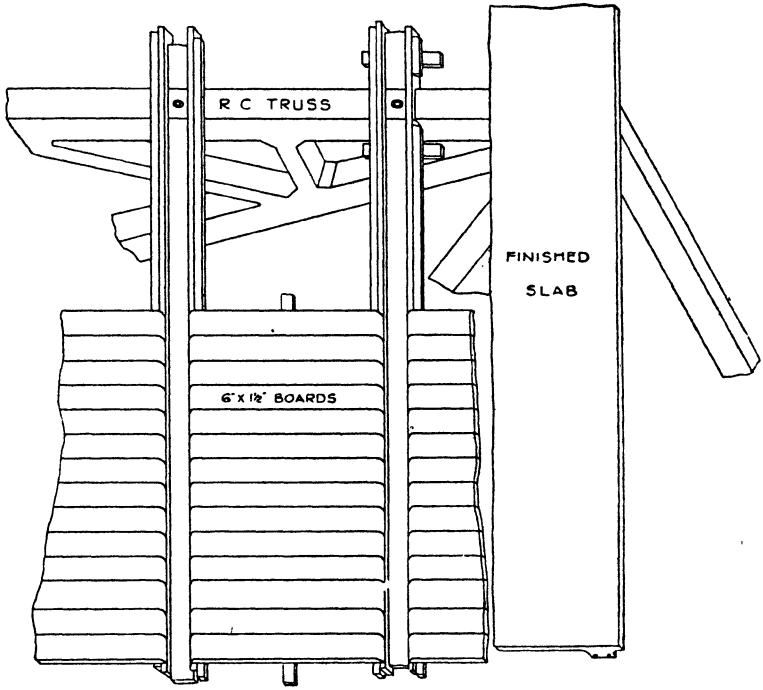


FIG. 58.

# CHAPTER X

# WATER TANKS

## Tanks above Ground Level.

THE following designs are suitable for tanks holding up to 6 ft. depth of water at or about the temperature of the air.

The tanks may be of any convenient shape and of any size up to a side of, say, 50 ft., but not less than 6 ft. Such tanks fall under two heads, namely, those above ground and those below. Each is an entirely different structure from the other from the design, and therefore the constructional, points of view. The former type will be described in detail before passing on to underground tanks; in both cases, however, they are considered as open or uncovered, as the addition of a roof again modifies the design.

Tanks at or above ground level can be dealt with in the manner shown in *Figs.* 59 and 60. An important assumption must here be made, namely, that the ground at the level of the underside of the floor is of a reliable and consistent nature over the whole area of the tank, and is capable of withstanding safely a pressure of at least 1 ton per square foot. If there is the slightest uncertainty about this the ground should be excavated until a reliable stratum is reached and the excavation filled and levelled up with 1 : 3 : 6 concrete to the underside of the floor.

If the floor can be lowered this may be done up to 1 ft. or so below ground level in order to save the mass concrete, but it would also be essential to drop the top of the tank walls by a like amount so as not to exceed the 6 ft. maximum depth of water.

On the other hand, if it is desired to raise the tank a foot or two above ground, this may be effected by making up beneath with mass concrete as before; but this concrete must be continuous over the whole site, as the floor illustrated is only sufficiently reinforced for a continuous bearing and would not span over openings as a suspended floor.

**Floor.**—This consists of a 5-in. slab reinforced with $\frac{3}{8}$-in. bars at 18-in. centres both ways (at right angles) in the top and in the bottom of the slab. The bars should be wired together at their crossings into a mesh, and those nearest the surfaces given $\frac{1}{2}$ in. cover of concrete.

The upper layer is retained in position by small concrete blocks or metal spacers, which are moved along or taken out as the concreting of the floor proceeds. The lower layer can be supported on $\frac{1}{2}$-in. bars similarly moved along, or on mortar or concrete blocks.

If the floor is laid directly on ground and the latter is liable to work

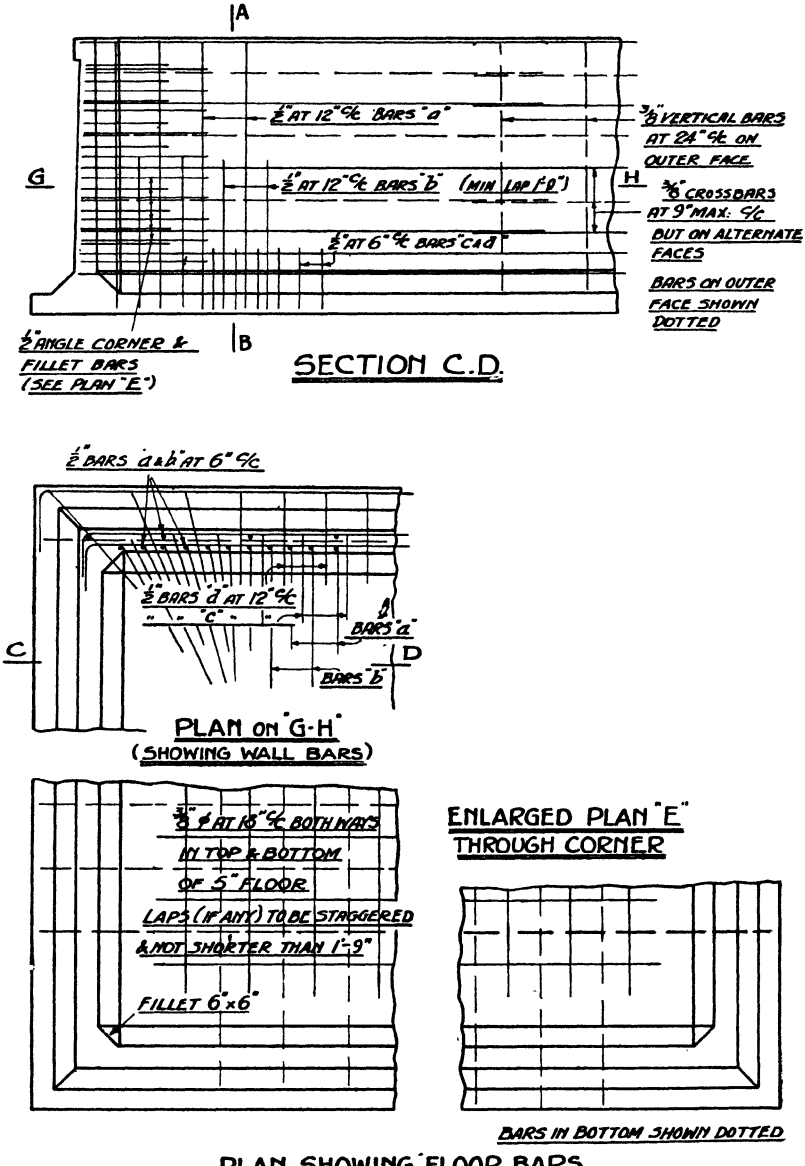
A
B
G
H
½" AT 12" C/C BARS "a"
½" AT 12" C/C BARS "b" (MIN LAP 1'-0")
½" AT 6" C/C BARS "c & d"
⅜" VERTICAL BARS AT 24" C/C ON OUTER FACE
⅜" CROSSBARS AT 9" MAX. C/C BUT ON ALTERNATE FACES
BARS ON OUTER FACE SHOWN DOTTED
½" ANGLE CORNER & FILLET BARS (SEE PLAN "E")
SECTION C.D.
½" BARS "a & b" AT 6" C/C
½" BARS "d" AT 12" C/C
" " "c" " " "
BARS "a"
BARS "b"
C
D
PLAN ON "G-H"
(SHOWING WALL BARS)
⅜" ϕ AT 18" C/C BOTH WAYS IN TOP & BOTTOM OF 5" FLOOR
LAPS (IF ANY) TO BE STAGGERED & NOT SHORTER THAN 1'-9"
FILLET 6"×6"
ENLARGED PLAN "E" THROUGH CORNER
BARS IN BOTTOM SHOWN DOTTED
PLAN SHOWING FLOOR BARS
SCALE - 12" 6" 0 1' 2' 3' 4'

FIG. 59.

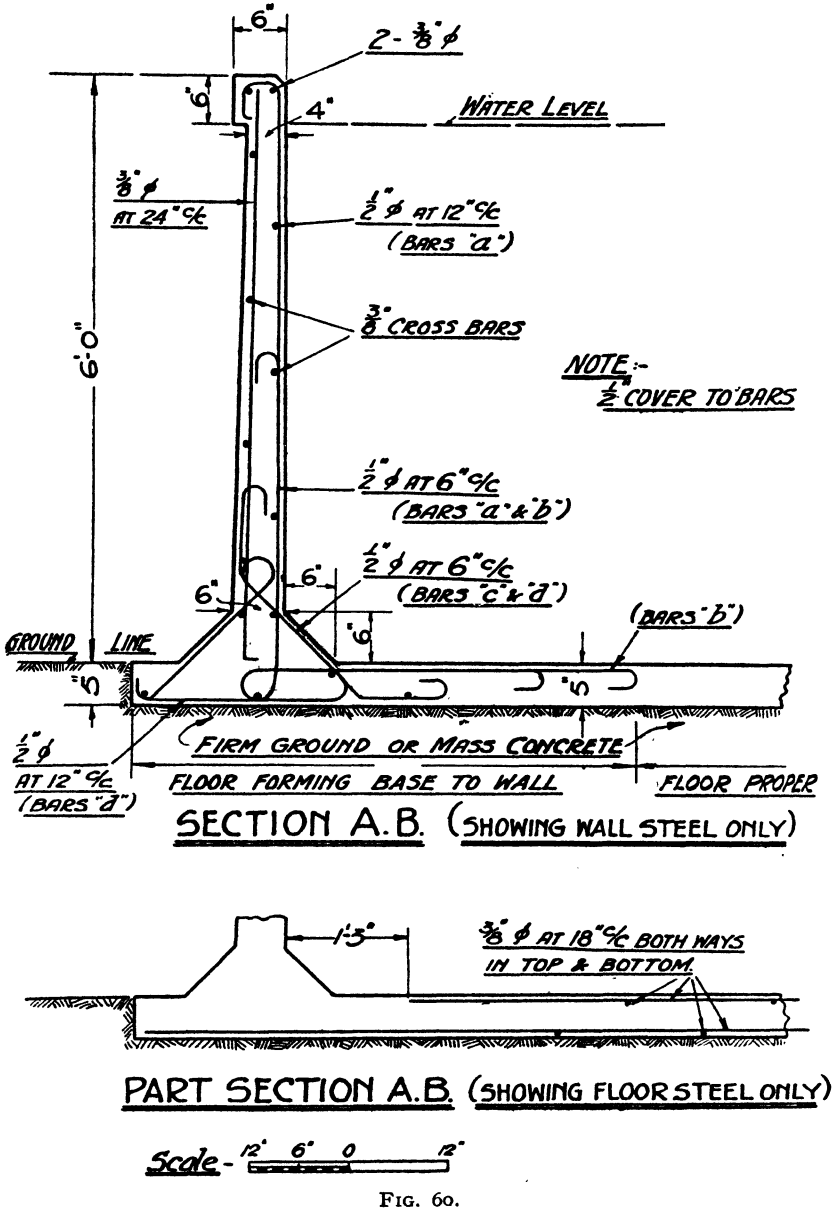
6"
2-3/8" ϕ
6"
4"
WATER LEVEL
3/8" ϕ
AT 24" c/c
1/2" ϕ AT 12" c/c
(BARS "a")
3/8" CROSS BARS
6'-0"
NOTE:-
1/2" COVER TO BARS
1/2" ϕ AT 6" c/c
(BARS "a" & "b")
1/2" ϕ AT 6" c/c
(BARS "c" & "d")
6"
6"
6"
(BARS "b")
GROUND LINE
6"
6"
1/2" ϕ
AT 12" c/c
(BARS "d")
FIRM GROUND OR MASS CONCRETE
FLOOR FORMING BASE TO WALL
FLOOR PROPER
SECTION A.B. (SHOWING WALL STEEL ONLY)
1'-5"
3/8" ϕ AT 18" c/c BOTH WAYS
IN TOP & BOTTOM.
PART SECTION A.B. (SHOWING FLOOR STEEL ONLY)
Scale - 12" 6" 0 12"

FIG. 60.

up into mud, it is desirable to cover the whole site with 2 in. of 1 : 3 : 6 concrete to form a working surface which will keep the reinforcement clean and prevent water from draining out of the floor concrete.

Concreting should be started at one end (outside the wall) and must be deposited for its full 5-in. thickness, well spaded and tamped, screeded to levels, and carried through to an approximately vertical joint at the end of each day's work.

The bars entering the floor from the wall (i.e. bars "a," "b," "c," and "d") must be placed and fixed before concreting commences.

In order to arrive at the lengths of the crossbars, set out the plan to scale, draw on the bars, beginning them where shown on Section AB. Arrange the laps (not to be shorter than 1 ft. 9 in.) so that they are staggered; that is, so that they "hit and miss" and do not all occur along any one section or line across the floor.

The fewer the laps and the longer the bars (up to, say, 25 ft.) the better, for economy in steel and from the point of view of strength.

In large tanks a fall will probably be required to the floor. This may be achieved by sloping the floor, say, 1 in. in 10 ft., upwards from the sump or lower end, or by screeding after a level floor has set.

A board, staked vertically, will be required around the perimeter of the floor as formwork.

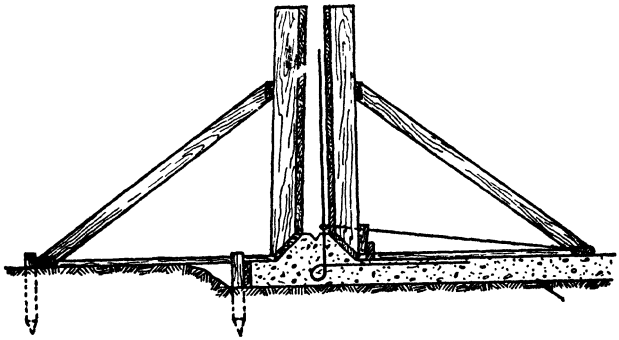

FIG. 61.

**Walls.**—The shuttering (*Fig.* 61) for the walls must be rigid and self-supporting; loose boards may be provided on the outside so that concreting and tamping may be carried up in 1-ft. lifts. Alternatively the shuttering may be built into panels of 1¼-in. boards nailed to vertical soldiers which bear against horizontal walings and are braced by raking struts. The panels are separated by timber distance pieces which can be removed as the level of the concrete rises in the wall. On the outside the rakers bear against pegs driven into the ground; on the inside their

thrust is taken by a longitudinal timber laid on the floor of the reservoir and tied back to the main reinforcement by steel wire.

The reinforcement as shown on the drawings must be carefully bent, placed, and securely wired and held so that it is not forced out of place during the pouring and ramming, particularly with regard to the ½-in. cover of concrete on each face. The notes relative to crossbars given under "Floor" also apply here, and the two meshes should be separated by spacers made of small-diameter bars hooked or turned at their ends.

The wall indicated in *Fig.* 60 tapers from 6 in. thick at the bottom to 4 in. at the top. It may, of course, be made 6 in. thick all the way up, which simplifies the shuttering and its setting up at the expense of a little more concrete. The coping, projecting 2 in., should, however, be maintained from the point of view of appearance.

Special care must be exercised at the corners to ensure that the extra bars shown in plan E are concreted in correctly. The crossbars in the walls must also be turned round 12 in. on the outer face of the adjoining wall at the corners.

The horizontal portions of the wall bars may be gradually turned to radiate into the floor (as shown on plan GH) in order to avoid two sets overlapping.

If the height of the wall above ground level is more than 3 ft. 6 in. the concrete cannot be lifted directly into the shuttering without the aid of a runway or other means. A simple staging formed by 9-in. by 3-in. planks spanning between two step ladders may be erected, and the concrete lifted in buckets to men standing on this.

**Quantities.**—To enable the quantities to be ascertained for tanks of any size or shape, these are given (1) per square yard of floor, (2) per linear yard of wall.

These amounts have only to be worked out for any particular case and multiplied by the following figures. *N.B.* The area considered as "Floor" extends only from 5 ft. from the outer edges of the floor (i.e. from where the wall bars in the floor are stopped and hooked). Thus, if the ends of the floor were 20 ft. apart the area of floor would be computed as 10 ft. (20 ft. less two 5-ft. wall bases). The balance of the floor forms the wall base, and must be so considered from the point of view of quantities because it contains a heavier proportion of reinforcement.

FLOOR (*per yard super*) :—

| | |
|---|---|
| Shuttering—5-in. board round perimeter, staked. | |
| Concrete—9 sq. ft. × 5 in. thick . . . . | 3·75 cu. ft. |
| Reinforcement—⅜-in. bars at 18-in. centres both ways, in top and bottom, straight, including a reasonable amount for laps . . | 10 lb. |

WALL (*per linear yard*) :—

Shuttering—38 ft. super (both sides measured). Add for posts, struts and cutting.

| | | | cu. ft. |
|---|---|---|---|
| Concrete—Wall base (or floor) | 15 sq. ft. × 5 in. thick | . | 6·25 |
| Fillets | 6 lin. ft. × 6 in. by 6 in. | . | 0·75 |
| Wall | 18 sq. ft. × 5 in. av. | . | 7·50 |
| Coping | 3 lin. ft. × 6 in. by 2 in. | . | 0·25 |
| | | | 14·75 |

Reinforcement—approximately 83 lb.

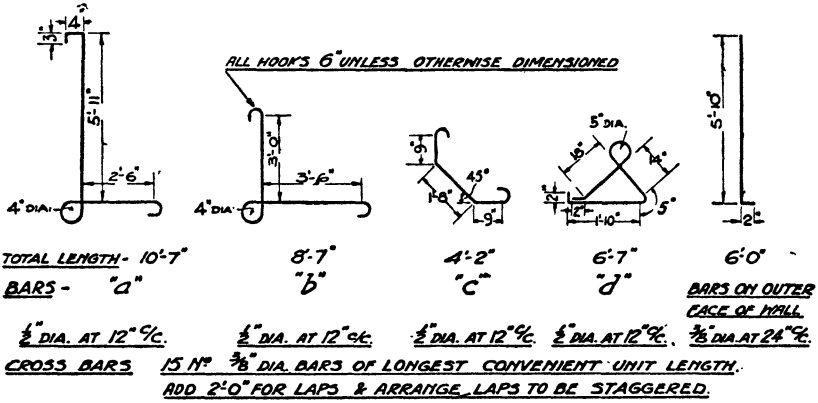


*Special Note.*—This design is based on the standard mix of 1 : 2 : 4 for the concrete, although a little richer mix may be used if desired.

In view of the fact that the concrete must be watertight, special care must be taken during mixing, placing, and punning to produce a dense concrete. Joints must be well cleaned and grouted before the next day's concreting begins. With reasonable care the thickness given should be watertight, although slight seepage may take place when the tank is first filled. This, however, should "take up" in a day or so.

The tank must not be filled for five or six weeks after the last pouring (if ordinary Portland cement is used) and the first filling should be gradual, extending over a day or two for fairly large tanks.

## Tanks below Ground Level.

Any tank where the ground line occurs more than 1 ft. above the level of the floor, or where earth or filling is to be tipped against the outside of the walls, will be termed, and must be treated as, an underground

tank. It will be readily appreciated that this introduces another condition into the design, namely, the walls must act as retaining walls when the tank is empty in addition to holding the water when full.

In the following design it is assumed that the ground is not water-

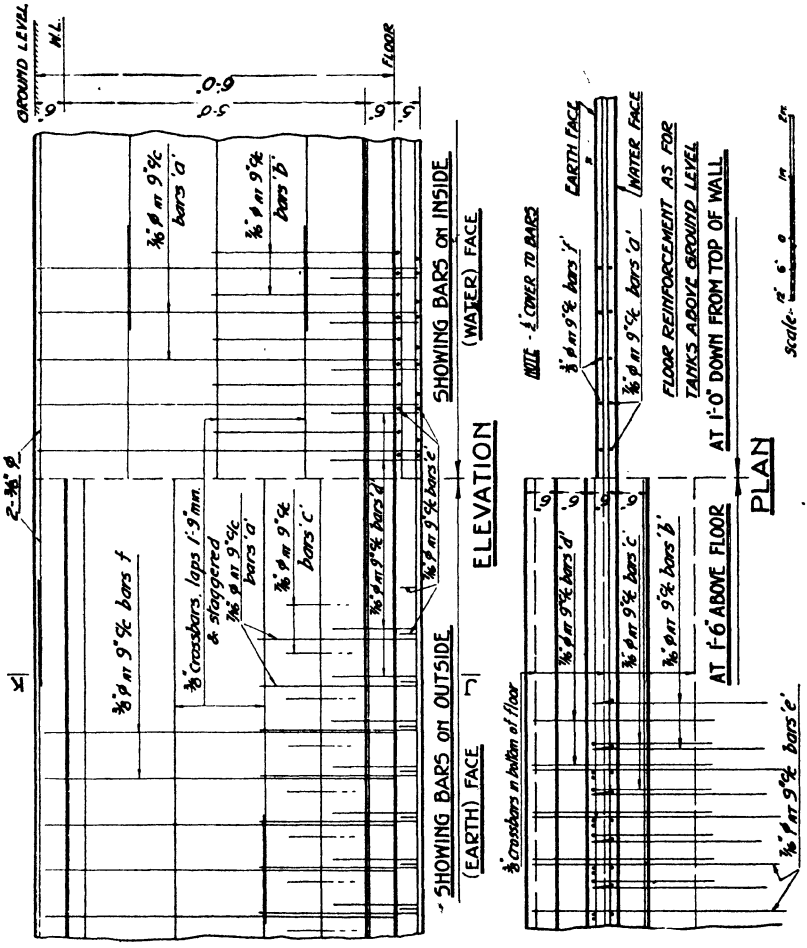


FIG. 62.

logged. Should the latter be found to be the case a special heavier design would be required, otherwise the floor may blow in or the whole tank float and rise bodily in the ground.

The notes and description of the floor for tanks above ground level

also apply to the design for underground tanks. The notes regarding the construction of walls for tanks above ground again apply here, except that the reinforcement is different as will be seen from *Figs.* 62

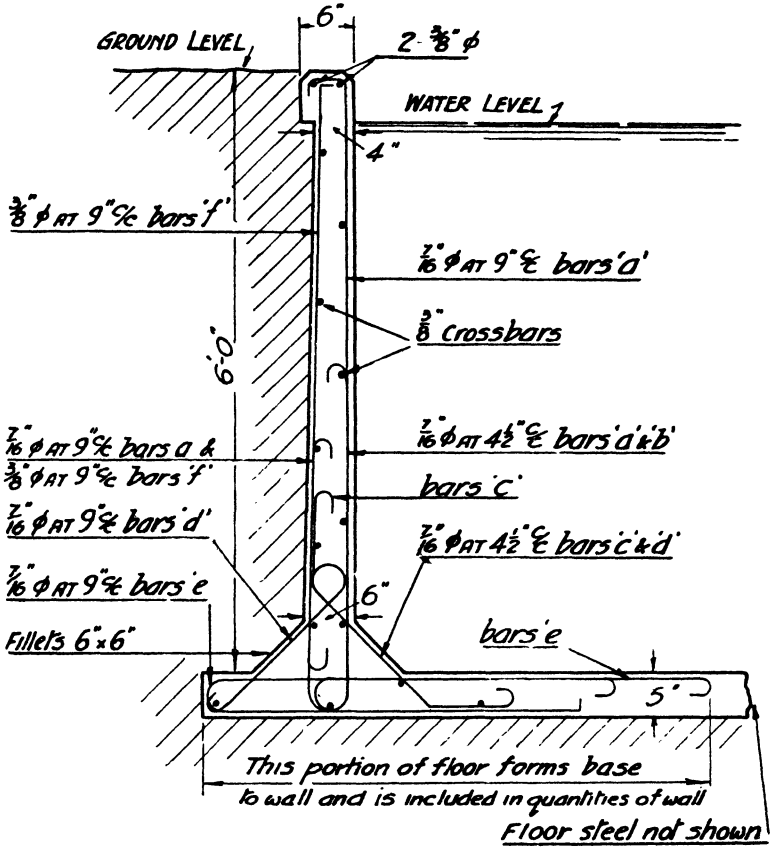


FIG. 63.—SECTION J–K.

and 63, which give full details. It will be noted that the concrete sizes are the same as before, while it must be understood that the additional corner reinforcement shown on plan E, *Fig.* 59, must, of course, be inserted in the manner there described.

**Quantities.**—The quantities are given (1) per square yard of floor (excluding wall base), (2) per lineal yard of wall (including wall base).

FLOOR (*per yard super*) :—

Shuttering—5-in. board round perimeter, staked.

Concrete—9 sq. ft. × 5 in. thick . . . . 3·75 cu. ft.

Reinforcement—$\frac{3}{8}$-bars at 18-in. centres, both ways, in top and bottom, straight, including a reasonable amount for laps . 10 lb.

WALL (*per lineal yard*) :—

Shuttering—38 ft. super (both sides measured). Add for posts, struts and cutting.

| | | | cu. ft. |
|---|---|---|---|
| Concrete—Wall base (or floor), | 15 sq. ft. × 5 in. thick | . | 6·25 |
| Fillets . . | 6 lin. ft. × 6 in. by 6 in. | . | 0·75 |
| Wall . . | 18 sq. ft. × 5 in. av. | . | 7·50 |
| Coping . . | 3 lin. ft. × 6 in. by 2 in. | . | 0·25 |
| Reinforcement—approximately 106 lb. | | | 14·75 |

The notes relating to the mix of the concrete and the care in the filling of the tank given in connection with tanks above ground apply equally in the case of tanks below ground level. In addition the earth filling or tip must not be thrown against the wall and tamped until five or six weeks have elapsed (assuming ordinary Portland cement is used).

With regard to the vertical bars in this wall, on both earth and water faces these bars occur nearest the surface (each having $\frac{1}{2}$-in. cover of concrete) so that the crossbars lie inside in both meshes.

This design would admit of the tank being tested by filling with water before the earth bank is filled in around it; again, at any subsequent date the earth bank may be removed for short lengths, if necessary down to within, say, 2 ft. of the bottom, without emptying the tank.

## Modifications for Smaller Tanks.

The following modifications for lesser depths and for short-sided tanks apply to tanks both above and below ground level.

**Modifications for Lesser Depths.**—Should the maximum depth required be 4 ft. or under, the thickness of the wall may be reduced to $4\frac{1}{2}$ in. and the diameter of the bars reduced to $\frac{3}{8}$ in. The lengths of the latter must, of course, be shortened to suit, leaving a clearance or cover of $\frac{1}{2}$ in. at the top and bottom. The radius of the circular bend in the fillet bars must also be reduced to $3\frac{1}{2}$ in. The thickness of the floor may be reduced to $4\frac{1}{2}$ in. if the ground is reliable.

**Modification for Tanks of less than 6-ft. Side.**—If any two opposite walls of a tank 6 ft. deep are to be built closer than 6 ft., as in the case of a tank 5 ft. 6 in. square on plan, then the floor must be 6 in.

thick throughout, and the top layer of floor reinforcement increased to ½-in. diameter, hooked both ends and placed at 9-in. centres. Where the depth of water is about 4 ft. or less the original 5-in. floor thickness may be retained.

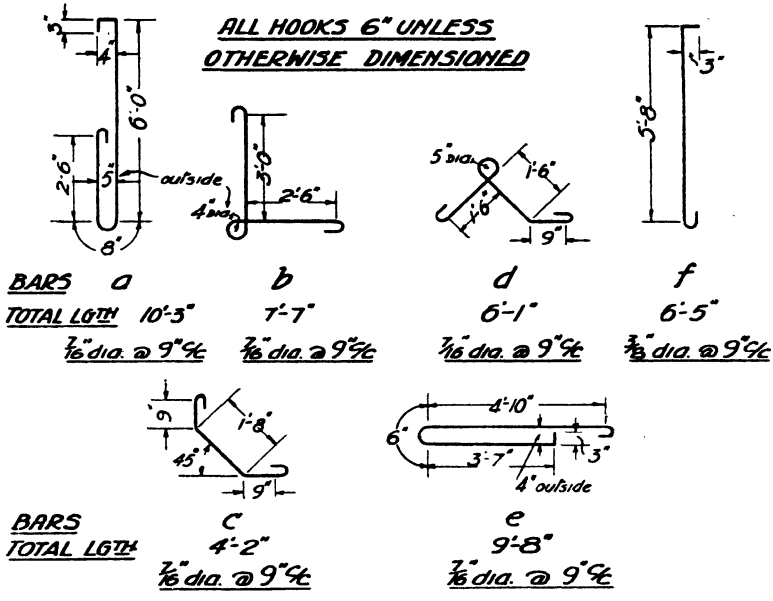


Crossbars—Fifteen ⅜ in. diameter bars of longest convenient unit length. (Add 2 ft. for laps and arrange laps to be staggered.)

## CHAPTER XI

# RETAINING WALLS

THESE notes refer to the construction of comparatively shallow retaining walls up to about 6 ft. total height, and of any length, such as would be suitable for supporting a bank of earth up to, say, 4 ft. 6 in. high.

Let it be assumed that the net height of ground to be supported is 4 ft. 6 in., that is, from lower ground line (L.G.L.) to higher ground line (H.G.L.) (see *Fig.* 64). Any wall of lesser net height can be constructed from the following particulars by deducting the difference from the top; i.e. by lowering the coping but retaining the same base and arrangement of reinforcement, and other dimensions shown.

This type is termed a cantilever wall in contradistinction to a counterfort or buttress wall, and it has been designed to retain ordinary earth trimmed to an approximately level upper surface on which only light loads (if any) would occur. If the backing is likely to be waterlogged, or to carry heavy loads—such as from a roadway, a railway, or a raft for a building, etc.—this design would not apply and specialist advice should be sought. For the moment it will also be assumed that H.G.L. and L.G.L. are horizontal or are to be finished so, as sloping sites necessitate modifications.

**Excavation.**—Excavation must be carried down to the depth 1 ft. 9 in. shown on the section, and this should be considered a minimum for ordinary ground. If a good bearing is not found at that depth the excavation should be continued until a satisfactory stratum is reached and then filled with mass concrete (1 : 2½ : 5) to the level of the underside of the base slab.

On the other hand, even if very good bearing ground is exposed before the above-mentioned depth is reached, excavation must proceed to the full depth because the side of the trench has to resist the thrust on the back and thus to prevent forward movement of the wall. It is therefore essential that the space marked A on *Fig.* 64 be refilled with good material and well consolidated after the wall is built. The only case permitting a reduction of excavated depth in front of the wall would be when the toe (T) thrusts directly against an extensive concrete slab or rock, etc.

Except in very compact ground it is desirable to run some rough boarding along the sides of the trench to prevent soil or the sides falling in before or during concreting.

For shallow banks it will perhaps be found cheaper to trim the bank back to a slope at which it will stand safely without danger of down-wash by heavy rains. If, however, this is not possible owing to lack of space for spoil on top or other causes, and in the case of greater height, the face of the bank must be roughly but adequately timbered and strutted, to retain temporarily the bank and prevent earth falling down into the trench.

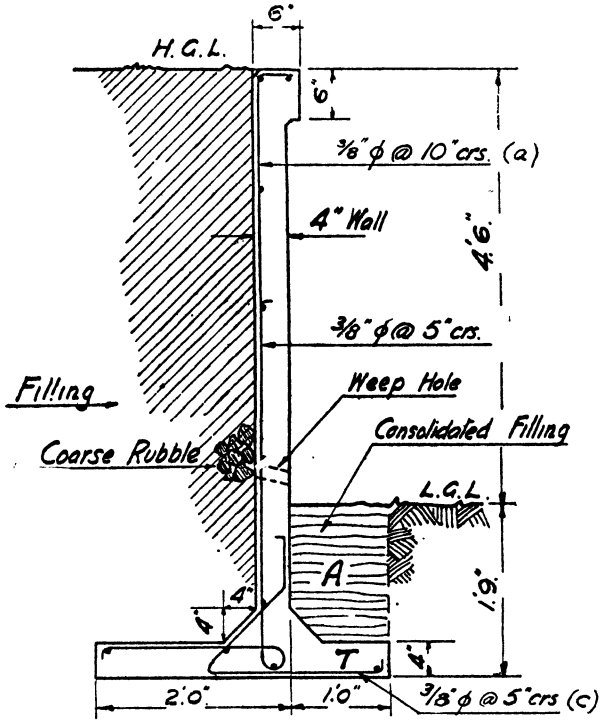


FIG. 64.—SECTION EF ON FIG. 65.

*Fig.* 66(*a*) shows a satisfactory method of timbering the excavation when the ground is fairly stiff and will stand unsupported for a short time. As the general excavation below the dotted line is removed stout posts at intervals of 6 ft. or so are sunk and driven until their toes are below the base level of the wall. A horizontal waling is then fixed near the tops of the posts and the latter are anchored back to posts at the upper ground level. Timber runners about 6 in. by 1 in. in section are then driven side by side and wedged against the waling. To make the driving

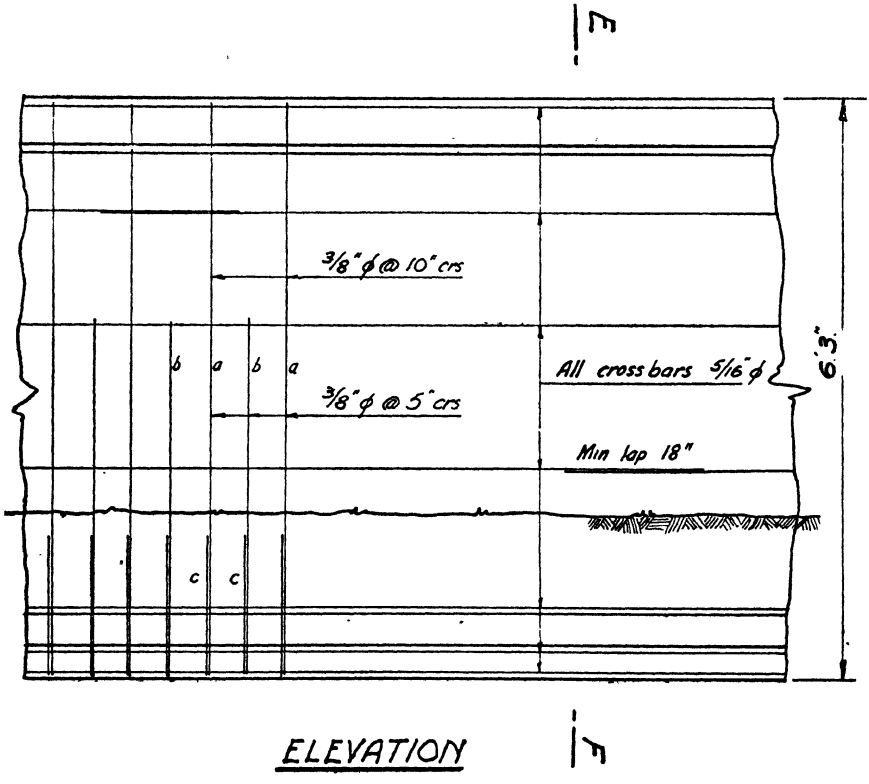


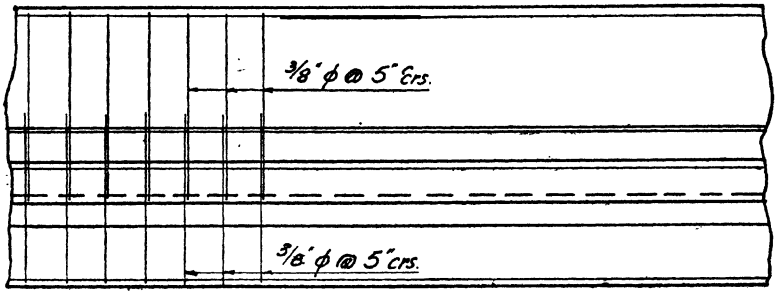


FIG. 65.—(FOR SECTION EF SEE FIG. 64.)

easy the bank is undercut at the toes of the posts and runners between successive periods of driving. If possible one should avoid supporting the timbering by raking struts which cross the position to be occupied by the wall, as this method will entail expensive cutting of the shuttering to box out the holes for the rakers and filling these holes with concrete when the shuttering has been stripped. This patching is not only unsightly but also a source of weakness.

We will now assume the preceding operations are finished, and that we have a clean and firm bottom to receive the base. During wet weather it may be difficult to keep the bottom free from mud, which must on no account be allowed to become mixed with the concrete or to coat the bars. In this case and in wet ground, therefore, a layer of rough concrete 1½ in. to 2 in. thick should be spread over the bottom of the trench to form a level and hard working floor. This concrete is, of course, additional to the 4-in. reinforced concrete base, and the excavation must also be carried 2 in. deeper to accommodate it. Any reinforcement (dealt with later) occurring in or projecting into the base-slab must now be placed, wired tightly together at all crossings with short lengths of annealed iron wire (No. 16 gauge) and securely held in position by a temporary wooden frame, or any means that suggests itself.

The main bars (i.e. all but the crossbars) are to have ½ in. cover of concrete. This can be conveniently achieved by placing short loose lengths of ½-in. diameter bar between the reinforcement and the ground or the shuttering. These form gauges, and can be moved along as concreting proceeds; but it is necessary to move them along before ramming is finished, or continuous holes will be left on the surface of the concrete. Wood blocks or strips should not be used, for if accidentally concreted in they may seriously affect the strength of the structure. A short study of the plan, elevation, and section in *Figs.* 64 and 65 will show that the ⅜-in. bars forming the vertical reinforcement must be inserted together with the four $\frac{5}{16}$-in. crossbars in the base.

The base slab may now be concreted to its full depth of 4 in. in one operation. This should be carried out in convenient short lengths, terminated by removable staked boards against which the concrete can be rammed. Care must be taken to ensure that the concrete is rammed between and under the bars without displacing them.

**Shuttering.**—A simple and satisfactory method of shuttering is shown in *Fig.* 66(*b*), the essential parts being posts, say, 4 in. by 3 in., at about 3 ft. intervals supporting horizontal 1¼-in. boards or sheeting. The posts must be braced longitudinally, and also strutted at front or rear when in position and plumb. With 1¼-in. boards the pairs of posts would be separated 6½ in. to give a 4-in. wall. The posts and sheeting must be cut to form 4-in. by 4-in. fillets, 6-in. by 2-in. coping, and the

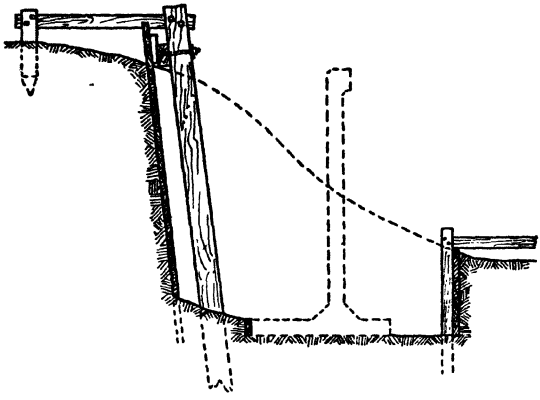

FIG. 66(*a*).

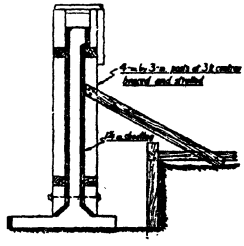

FIG. 66(*b*).

smaller 1-in. by 1-in. fillets. For a long stretch of wall one or two unit lengths of standardised shuttering should be made, which can be dismantled and reassembled.

The posts may be strutted from other timbering at the bottom, or bolted or wired through the shuttering to the opposite post. Such bolts or wires should if possible be withdrawn and in any case kept well below front ground level. At their tops the posts are connected by a nailed strip.

One side of the sheeting can be erected to the full height of the wall, but an open side must be left above the 4-in. by 4-in. fillets so that the concrete can be poured, crossbars wired on, the concrete rodded, and the whole easily inspected. Concreting should be carried up in 12-in. layers, by inserting two or three boards at a time on the open face and filling up, the ends of a section being stopped with removable boards to ram against.

At about 6 in. or 9 in. above L.G.L. tapered cylindrical blocks of wood should be cast in, and these can be knocked out later to form weep holes at 10-ft. to 15-ft. centres.

The top surface of the coping need not be shuttered, but the concrete should be brought up flush and trowelled off smooth.

**Reinforcement.**—Reinforcement should consist of round bars of the diameters indicated in *Figs.* 64 and 65. The 8 ft. 11 in. long $\frac{3}{8}$-in. bars (*a*) at 10-in. centres alternate with the 6 ft. 4 in. long $\frac{3}{8}$-in. bars (*b*) at equal centres, making a series of $\frac{3}{8}$-in. bars at 5-in. centres at the bottom, from which the number of each length required can be estimated by multiply-

ing the length of the wall in feet by $\frac{12}{10}$. The number of fillet bars ($c$) required is the same as the total of the vertical wall bars ($a + b$).

The $\frac{5}{16}$-in. crossbars should also be so arranged that they are as long as they conveniently can be to suit the length of the wall, say, about 20 ft., and the lap at the splice should not be less than 18 in. These laps should also be arranged so that they are spread evenly along the length of the wall and are not bunched together near any one section. The wall should be drawn out to scale and the bars set out, measured off, and ordered accordingly. The total weight of steel per yard run of wall is approximately 40 lb., including an allowance of 10 per cent. for crossbar laps.

For a wall of this nature the bars can be assembled in short units and lifted into the trench. Some or all of the wall crossbars may be omitted until the base has been concreted, but the tops of the $\frac{3}{8}$-in. bars should be securely fastened to a wooden strip, which can form part of the framework, holding the reinforcement in position before the base is concreted and has set. It is very important that bars projecting from concrete—particularly green concrete—should not be disturbed.

**Removal of Shuttering.**—The wall will not reach its proper strength to resist earth thrust until at least six weeks have elapsed after concreting (or less with rapid-hardening cement), so that the future bank which has to be retained must not be filled in behind the wall until this period has passed unless the face shuttering be retained and strutted to take the earth thrust. When inserting this filling, coarse rubble or the largest stones available should be placed around and above the weep holes. The filling in front of the wall should, of course, be placed before that at the back, and be well consolidated as mentioned above.

## WALL: OVERALL HEIGHT, 6 ft. 3 in.

### Quantities per Linear Yard of Wall.

(Based on 1 : 2 : 4 concrete.)

| | | | cu. ft. |
|---|---|---|---|
| Concrete :— | Base . . | 1 sq. yd. × 4 in. thick | 3·0 |
| | Fillet . . | 6 lin. ft. × 4 in. by 4 in. | 0·33 |
| | Wall . . | 2 sq. yd. × 4 in. | 6·00 |
| | Coping . . | 3 lin. ft. × 6 in. by 2 in. | 0·25 |
| | | | 9·58 |

Shuttering :—Wall : 38 ft. super (both sides measured) net. Add for cutting, posts, struts, etc.

REINFORCEMENT (approx. 40 lb.) :—

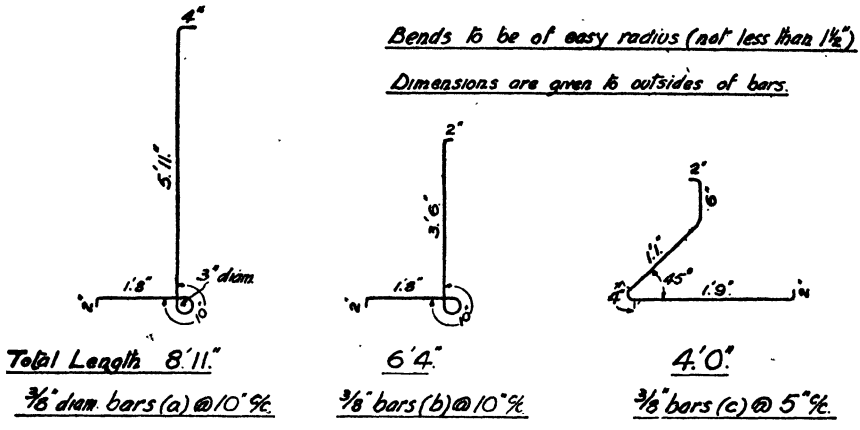


Crossbars—Ten $\frac{5}{16}$ in. diameter per unit length of wall.
(Add 1 ft. 6 in. to unit length for lap.)

**Modifications for Lower Walls.**—If the net height be considerably less than 4 ft. 6 in. the diameters of the bars may be reduced as shown in *Table* 16.

TABLE 16.

| Height of wall. | Diameter of bars (at 5 in. centres). | Width of base. |
|---|---|---|
| (L.G.L. to H.G.L.) | | (See *Fig.* 64.) |
| 4 ft. 6 in. to 3 ft. 9 in. | $\frac{3}{8}$ inch | 2 ft. 0 in. heel and 1 ft. toe |
| 3 ft. 9 in. to 3 ft. 0 in. | $\frac{5}{16}$ inch | 2 ft. 0 in. heel and 9 in. toe |
| 3 ft. 0 in. and below | $\frac{1}{4}$ inch | 1 ft. 9 in. heel and 9 in. toe |

The spacing of the bars, diameter of crossbars, and thickness of concrete remain as indicated in *Figs.* 64 and 65, but the width of base may be decreased according to *Table* 16. The vertical and horizontal lengths of the main bars must therefore be adjusted to the new dimensions, but the 1 ft. 9 in. depth below L.G.L. should not be reduced.

## Expansion Joints.

The necessity for expansion joints varies, of course, with circumstances, and would not arise at all in the case of short walls up to, say, 50 ft. or 60 ft. long. In long straight walls, however, joints should be provided at from about 100 ft. intervals for sheltered walls facing north to 50 ft. intervals for very exposed positions facing south. Many walls

have, of course, been built with joints, if any, at much greater intervals; but a risk is involved if the limits are materially increased or the matter entirely ignored. On the other hand, the more joints provided the less will be the tendency for contraction cracks to appear.

Should it be desired to increase the intervals, the number of crossbars in the wall and coping should be increased in the same proportion as the interval is increased, and the crossbars placed equally along both surfaces of the wall.

A suitable joint is shown in *Fig.* 67, the gap between the ends of each section of wall being ½ in. This gap may be conveniently screened by a post, a series of which would be introduced to relieve the monotony of a long stretch of plain wall. The post may be pre-cast or cast in-situ together with one section of the wall, while a paper or sliding joint is left against the adjacent section. In the case illustrated the joint is covered at the rear and under the base by a 4-in. pre-cast plank, which prevents soil entering and at the same time allows of free longitudinal movement due to temperature and humidity changes.

If the joint is not thoroughly cut off from the earth filling, or if there is any danger of it filling from any cause whatsoever, the gap should be filled with yielding material, such as a bituminous preparation, to exclude stones and soil and so ensure that it always functions properly.

It should be noted that all crossbars are to be well hooked at their ends abutting against the joint.

## Returns and Angles.

The stresses in a cantilever wall are entirely altered at any point of sharp change in direction on plan, and additional horizontal reinforcement is then required. If this extra horizontal reinforcement is omitted or insufficient the wall will crack at, or near, the corner in order to adjust itself to the vertical reinforcement provided. The latter is, of course, sufficient from the point of view of safety but cannot prevent vertical cracks, which are defects to be foreseen and avoided.

For the walls described the following horizontal bars are required extra to the usual crossbars (which should be continued 12 in. round the corner). The shapes to which they are to be bent and their positions are given in *Fig.* 68. Each set of bars, consisting of ⅜-in. corner, angle, and fillet bars, is to occur at 6-in. centres all the way up the corner. The crossbars in the base should also be taken well on, and the outer one bent round the corner.

## Sloping Sites.

More often than not it will be found that either or both the higher and lower ground lines are inclined when the wall is viewed in elevation.

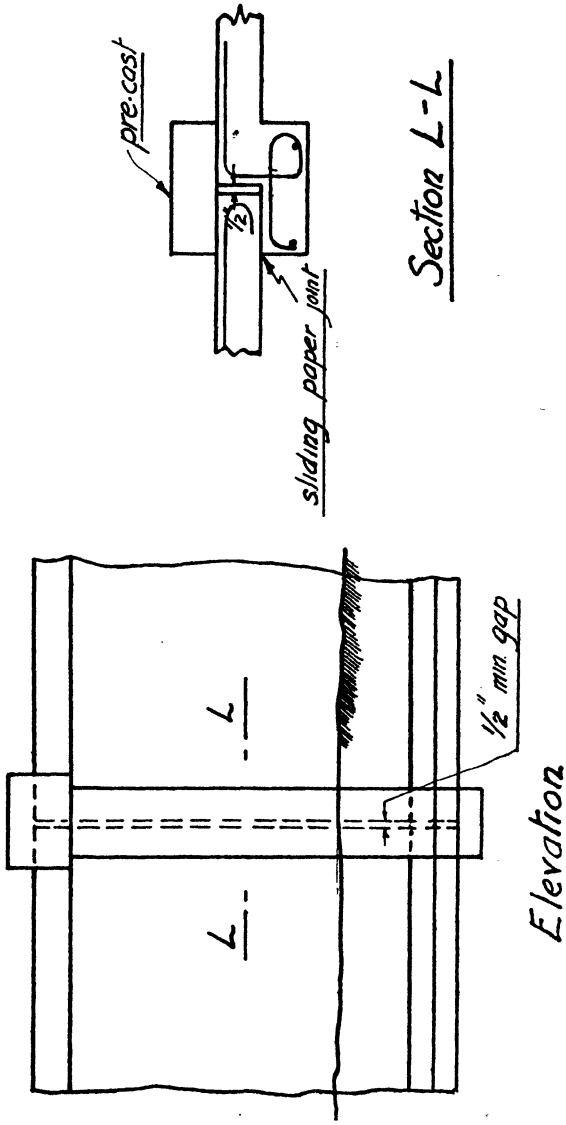


FIG. 67.—EXPANSION JOINT.

This introduces a difficulty in that the limits of heights and depths are soon outrun, as the base, except in very rare cases, must be maintained horizontal throughout. The base should therefore be stepped at intervals, as in the case of house footings on sloping sites.

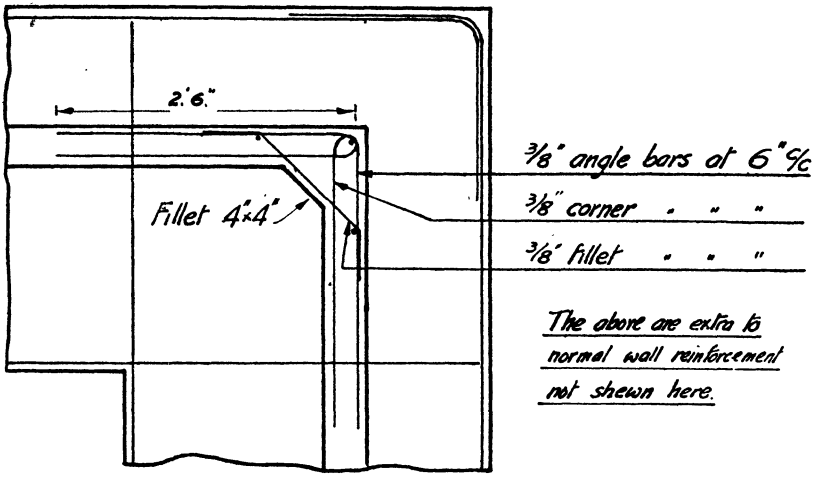


FIG. 68.—SECTION THROUGH CORNER.

The coping may follow the slope of the H.G.L., but a much better appearance will result if, when possible, the top is trimmed level to permit of the coping being horizontal. Both the top and base can then be stepped at regular intervals to accommodate the wall to the general slope, as shown in *Fig.* 69. There is an additional advantage in so doing, because the wall is constant in dimensions throughout the interval.

Practically each case will need separate treatment, so that an accurate survey must be made and plotted, and the wall drawn out so

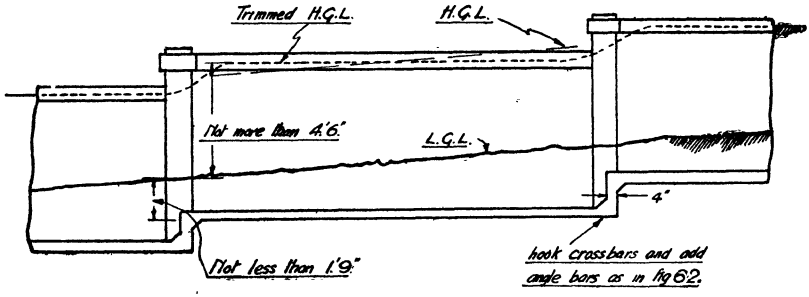


FIG. 69.—WALL ON SLOPING GROUND.

that its minimum depth below L.G.L. is 1 ft. 9 in., while its maximum net height must not exceed 4 ft. 6 in. Where the inclination is very marked and the foundation sound, the 1 ft. 9 in. depth may be reduced to 1 ft. 6 in., when continuous with a deeper base.

The junction at each step should be provided with a post or pillar of adequate width to correspond with the length of each section, and reinforced with a $\frac{3}{8}$-in. bar at each corner with $\frac{1}{4}$-in. binders at 9-in. centres vertically. The normal wall reinforcement must, of course, be inserted, and not omitted for the width of the pillar, which is purely a decorative addition of no structural value. Expansion joints in a stepped wall would naturally be arranged to occur behind some of these posts.

# INDEX


Aggregates, Measurement of, 3
„ Size of, 2
„ Types of, 2

Beams, Bearing for, 34
„ Concreting, 8, 34
„ Continuous, 38
„ Design of, 29
„ Quantities of materials for, 37
„ Reinforcement for, 32
„ Shuttering for, 35
„ Single-span, 29
„ Wall, 41

Cement, Measurement of, 2
„ Storage of, 1
„ Strength of, 1
Column foundations, Design of, 12
„ „ Quantities of materials for, 17
„ „ Reinforcement for, 15
„ „ Shuttering for, 15
Columns, Concreting, 8, 28
„ Design of, 22
„ Quantities of materials for, 26
„ Shuttering for, 26
Concrete, Weight of, 10
Consolidation, 6
Curing, 8

Excavation for retaining walls, 102
Expansion joints in retaining walls, 108

Fittings, 9
Floor slabs, Centering for, 50
„ „ Concreting, 52
„ „ Design of, 49
„ „ Reinforcement for, 51
Foundations, Design of column, 12
„ Quantities of materials for column, 17
„ Reinforcement for column, 14
„ Shuttering for column, 14
„ Wall, 17
„ Depth of, 11
„ Loads on, 11
„ Raft, 19

Granolithic, 52

Joints, Construction, 7
„ in retaining walls, Expansion, 108

Lintels, Design of, 44
„ Lifting, 48
„ Shuttering for, 46

Mixing concrete, 3

Placing concrete, 6
Proportions of concrete, 2

Raft foundations, 19
Reinforcement, Bending, 4
„ Cover of concrete to, 5
„ Fixing, 5
„ for beams, 32
„ for column foundations, 14
„ for columns, 24
„ for floor and roof slabs, 51
„ for lintels, 45
„ for panel walls, 61
„ for retaining walls, 106
„ for saw tooth roofs, 81
„ for staircases, 67
„ for tanks, 94

Reinforcement Specification for, 1
„ Weight of, 10
„ Welding of, 1
„ Wire for tying, 1
Retaining walls, Design of, 102
„ „ Excavation for, 102
„ „ Expansion joints in, 108
„ „ Reinforcement for, 106
„ „ Shuttering for, 105
Roof slabs, Centering for, 50
„ „ Concreting, 52
„ „ Design of, 59
„ „ Reinforcement for, 51
Roof trusses, Design of, 84
„ „ Lifting, 82
„ „ Manufacture of, 78
Roofs, Reinforcement for saw tooth, 81
„ Saw tooth, 77

Sand, Size of, 2
„ Types of, 2
Shuttering, Construction of, 6
„ for beams, 35
„ for column foundations, 14
„ for columns, 26
„ for floor slabs, 50
„ for lintels, 46
„ for retaining walls, 105
„ for saw tooth roofs, 79
„ for staircases, 70
„ for tank walls, 95
„ Materials for, 5
„ Removal of, 9
Slabs, Bearing of floor, 49
„ Centering for floor and roof, 50
„ Concreting floor, 8, 52
„ Concreting roof, 52
„ Design of continuous span, 53
„ Design of single-span, 53
„ Finishing floor, 52
„ Loads on, 49
„ Specification, 1
Staircases, Construction of, 67
„ Design of, 62
„ Reinforcement for, 67
„ Shuttering for, 70
Steps, Fixing, 65
„ Fixing balusters to, 65
„ Pre-cast, 62
„ Surface finish of, 66
Surface finish, 10

Tank walls, Shuttering for, 95
Tanks above ground level, Design of, 92
„ below ground level, Design of, 97
„ Quantities of materials for, 96, 99
„ Reinforcement for, 94
Testing concrete structures, 9

Vibration, 7

Wall foundations, 17
Walls, Design of panel, 60
„ Design of retaining, 102
„ Expansion joints in retaining, 108
„ of Tanks, 95
„ Reinforcement for panel, 61
„ Reinforcement for retaining, 106
„ Shuttering for retaining, 105
Water content of concrete, 3
„ for concrete mixing, 2
Welding reinforcement, 1
Wire for tying reinforcement, 1

# "CONCRETE SERIES" BOOKS on CONCRETE and CEMENT

**Send a postcard for detailed prospectuses of these and other up-to-date and useful books.**

**Reinforced Concrete Designers' Handbook.** By CHAS. E. REYNOLDS, B.SC., A.M.INST.C.E. Revised and enlarged 1939. 316 pages, 40 designing tables, 54 illustrations. Price 15*s.*; by post 15*s.* 6*d.* inland, 16*s.* abroad.

**Practical Examples of Reinforced Concrete Design.** By CHAS. E. REYNOLDS, B.SC., A.M.INST.C.E. Reprinted 1942. 272 pages, 63 illustrations, 100 design tables and calculation sheets. Price 8*s.* 6*d.*; by post 9*s.*

**Explanatory Handbook on the Code of Practice for Reinforced Concrete.** By W. L. SCOTT, M.INST.C.E., and W. H. GLANVILLE, D.SC., A.M.INST.C.E. Revised 1939. 160 pages, 24 illus., 38 tables. Price 8*s.*; by post 8*s.* 6*d.*

**The Elements of Reinforced Concrete Design.** By HADDON C. ADAMS, M.A. (CANTAB.), M.INST.C.E. Reprinted 1942. 146 pages, 101 illustrations, 11 design charts, 9 tables. Price 6*s.*; by post 6*s.* 6*d.*

**Reinforced Concrete Water Towers, Bunkers, Silos and Gantries.** By W. S. GRAY, B.A., M.A.I., A.M.INST.C.E.I. Published 1933. 236 pages, 170 illus., 2 folders. Price 10*s.*; by post 10*s.* 6*d.*

**Reinforced Concrete Reservoirs and Tanks.** By W. S. GRAY, B.A., M.A.I., A.M.INST.C.E.I. Revised 1942. 172 pages, 133 illustrations. Price 10*s.*; by post 10*s.* 6*d.*

**Reinforced Concrete Piling.** By F. E. WENTWORTH-SHEILDS, O.B.E., M.INST.C.E., and W. S. GRAY, B.A., M.A.I., A.M.INST.C.E.I. Published 1938. 126 pages, 84 illustrations, 17 tables. Price 8*s.* 6*d.*; by post 9*s.*

**Reinforced Concrete Chimneys.** By C. PERCY TAYLOR, F.C.G.I., M.INST.C.E., and LESLIE TURNER, B.SC., M.INST.C.E. Published 1940. 64 pages, design charts, 45 illus. Price 8*s.* 6*d.*; by post 9*s.*

**Continuous Beam Structures:** A DEGREE OF FIXITY METHOD AND THE METHOD OF MOMENT DISTRIBUTION. By ERIC SHEPLEY, B.SC., A.M.INST.C.E. Published 1942. 122 pages, 77 illustrations, 19 tables. Price 7*s.* 6*d.*; by post 8*s.*

**Road Bridges in Great Britain.** (Descriptions of 96 reinforced concrete bridges). 162 pages, 171 photographs and working drawings. Published 1939. Price 6*s.*; by post 6*s.* 6*d.*

**Raft Foundations: The Soil-Line Method.** By A. L. L. BAKER, B.SC. (TECH.), A.M.INST.C.E. Enlarged edition 1942. 150 pages, 89 illustrations. Price 8*s.*; by post 8*s.* 6*d.*

**Design of Arch Roofs.** By J. S. TERRINGTON, B.SC. (LOND.), A.C.G.I., A.M.INST.C.E. Published 1937. 28 pages, 13 illustrations, 26 tables. Price 3*s.*; by post 3*s.* 3*d.*

**Design of Domes.** By J. S. TERRINGTON, B.SC. (LOND.), A.C.G.I., A.M.INST.C.E. Published 1937. 28 pages, 3 tables, 13 illustrations. Price 3*s.*; by post 3*s.* 3*d.*

**Design of Pyramid Roofs.** BY J. S. TERRINGTON, B.SC., A.C.G.I., A.M.INST.C.E. 19 pages, 22 illus. Published 1939. Price 3*s.*; by post 3*s.* 3*d.*

**Influence Lines for Thrust and Bending Moments in the Fixed Arch.** By B. ERIKSEN, A.M.I.STRUCT.E. 25 pages, 12 illus., 12 tables. Published 1939. Price 3*s.*; by post 3*s.* 3*d.*

**Estimating and Cost-keeping for Concrete Structures.** By A. E. WYNN, B.SC., A.M.AM.SOC.C.E. Published 1930. 251 pages, 92 illustrations, 2 folders. Price 15*s.*; by post 15*s.* 6*d.* inland, 15*s.* 9*d.* abroad.

**Design and Construction of Formwork for Concrete Structures.** By A. E. WYNN, B.SC., A.M.AM.SOC.C.E. 310 pages, 229 illustrations, 9 folders, 11 design tables. Revised 1939. Price 20*s.*; by post 20*s.* 6*d.* inland, 21*s.* abroad.

**Concrete Construction.** By CHAS. E. REYNOLDS, B.SC., A.M.INST.C.E. Published 1938. 520 pages, 400 illustrations. Price 15*s.*; by post 15*s.* 6*d.* inland, 16*s.* abroad.

**How to Make Good Concrete.** By H. N. WALSH, M.E., D.I.C., M.INST.C.E.I., A.M.INST.C.E. 108 pages, 30 illus., 17 grading curves, 6 tables. Published 1939. Price 4*s.*; by post 4*s.* 6*d.*

**Design and Construction of Air-Raid Shelters.** By DONOVAN H. LEE, B.SC. (ENG.), M.INST.C.E. 86 pages, 60 illus. Published 1940. Price 8*s.* 6*d.*; by post 9*s.*

**Design and Construction of Concrete Roads.** By R. A. B. SMITH, M.C., A.C.G.I., A.M.INST.C.E. Revised 1938. 272 pages, 128 illustrations, 12 tables. Price 8*s.* 6*d.*; by post 9*s.*

**Concrete Surface Finishes, Rendering and Terrazzo.** 136 pages, 84 illustrations, 6 plates. Published 1935. Price 6*s.* 6*d.*; by post 6*s.* 10*d.*

**Concrete Construction Made Easy.** By LESLIE TURNER, B.SC., M.INST.C.E., and ALBERT LAKEMAN, L.R.I.B.A., M.I.STRUCT.E. Reprinted 1942. 118 pages, 69 illustrations, 16 tables. Price 4*s.*; by post 4*s.* 6*d.*

**Modern Methods of Concrete Making.** By EWART S. ANDREWS, B.SC., M.INST.C.E., and A. E. WYNN, B.SC., A.M.AM.SOC.C.E. Third Edition. Reprinted 1939. Price 1*s.*; by post 1*s.* 2*d.*

**Elementary Guide to Reinforced Concrete.** By ALBERT LAKEMAN, L.R.I.B.A., M.I.STRUCT.E. Seventh Edition revised 1940. 94 pages, 79 illustrations. Price 2*s.* 6*d.*; by post 2*s.* 9*d.*

**The Concrete Year Book.** A Handbook, Directory, and Catalogue. Edited by OSCAR FABER, O.B.E., D.SC., M.INST.C.E., and H. L. CHILDE, Editor of Concrete Publications Ltd. Revised every year. Price 5*s.*; by post 5*s.* 8*d.* inland, 6*s.* abroad.

**Concrete Farm Silos, Granaries and Tanks.** By A. M. PENNINGTON. 80 pages, 48 illustrations, 9 tables. Published 1942. Price 6*s.*; by post 6*s.* 6*d.*

**Concrete Products and Cast Stone.** By H. L. CHILDE. 272 pages, 252 illustrations. Seventh (completely re-written) edition, 1940. Price 8*s.* 6*d.*; by post 9*s.*

**Making Pre-cast Concrete for Profit: A System of Cost-keeping and Determining Profits.** 56 pages. Published 1930. Price 3*s.* 6*d.*; by post 3*s.* 9*d.*

**Moulds for Cast Stone and Pre-cast Concrete.** By F. BURREN and G. R. GREGORY. With designs for garden ware by T. RAFFLES DAVISON, HON.A.R.I.B.A. 96 pages, size 11 in. × 7½ in. Revised 1936. Price 4*s.*; by post 4*s.* 6*d.*

**Manufacture of Concrete Roofing Tiles.** By R. H. BAUMGARTEN and H. L. CHILDE. 96 pages, 61 illustrations. Published 1936. Price 7*s.* 6*d.*; by post 7*s.* 10*d.* inland, 8*s.* abroad.

**Portland Cement.** By A. C. DAVIS, M.I.MECH.E., F.C.S., M.I.STRUCT.E., F.R.G.S. Revised 1942. 350 pages, 261 illustrations, 19 tables. Price 30*s.*; by post 30*s.* 7*d.* inland, 31*s.* abroad.

**Cement Chemists' and Works Managers' Handbook.** By W. WATSON, B.SC., and Q. L. CRADDOCK, M.SC. 186 pages, 152 tables, 14 illustrations. Published 1940. Price 15*s.*; by post 15*s.* 7*d.* inland, 15*s.* 8*d.* abroad.

**International Dictionary of Cement.** By DR. C. R. PLATZMANN. Published 1935. Price 7*s.* 6*d.*; by post 7*s.* 9*d.*

**Concrete and Constructional Engineering.** Price 1*s.* 6*d.* monthly. Send for free specimen copies.

**Concrete Building and Concrete Products.** Price 4*d.* monthly. Send for free specimen copies.

**Cement and Lime Manufacture.** Price 1*s.* monthly. Send for free specimen copies.

**CONCRETE PUBLICATIONS LIMITED, 14 DARTMOUTH ST., WESTMINSTER, S.W.1**

620.136 T x9c

DATE OF ISSUE

This book must be returned within 3, 7, 14 days of its issue. A fine of ONE ANNA per day will be charged if the book is overdue.